Quality Parts

WRX 30

Electric Straddle Reach Stacker Truck

Effective Serial Number 31136001 - UP

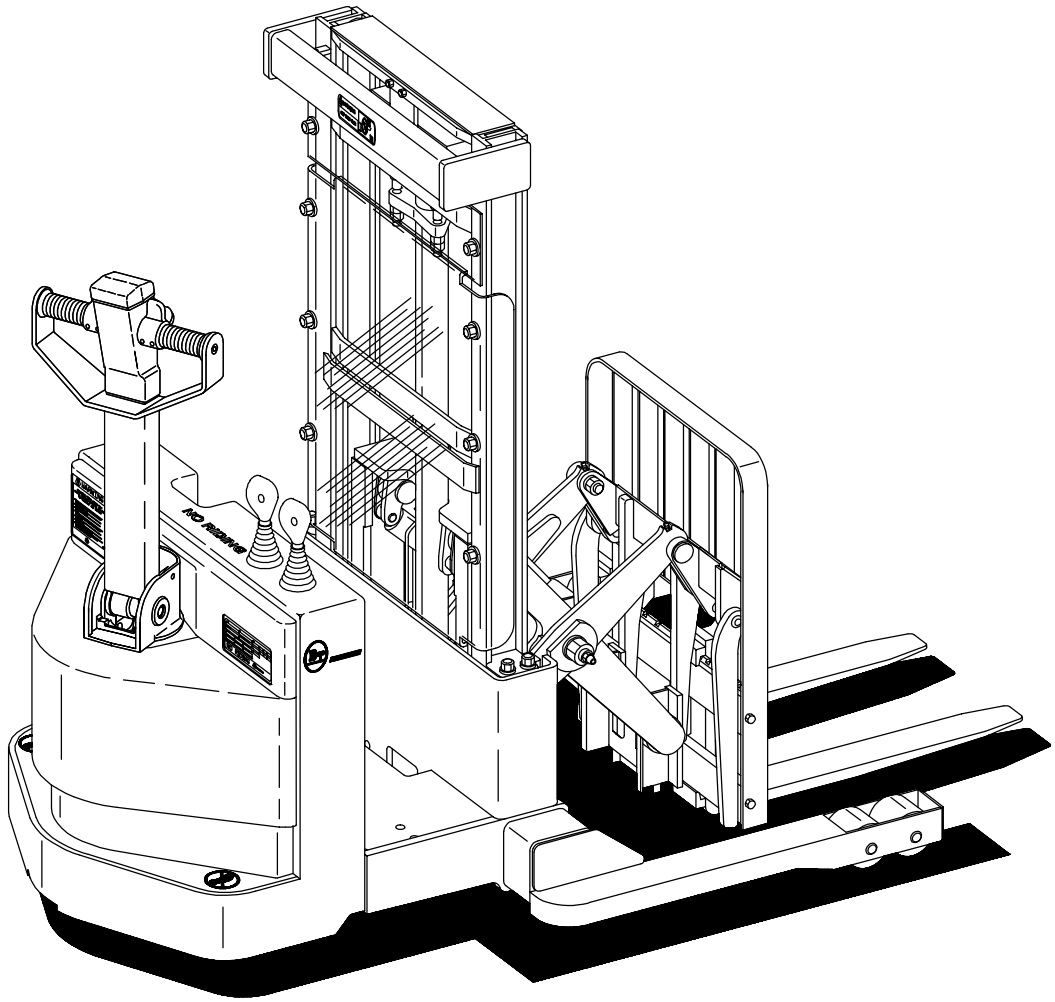

WARNING Read and observe all warnings on this unit before operating it.

WARNING **DO NOT** operate this equipment unless all factory installed guards and shields are properly secured in place.

Part no: 304956-001

Date: August 08, 2001

Return

Prime-Mover is a trademark of **BT Prime-Mover Inc.**,
© 2001 BT Prime-Mover Inc., Muscatine, Iowa.
All Rights Reserved.

Return

PARTS ORDERING INSTRUCTIONS

HOW TO ORDER

When you order, supply the part number, quantity, model and serial numbers of your machine. Supplying this information will assure prompt, efficient handling of your order. The pictorial reference number is not needed and including it can only add confusion.

Since your dealer carries many parts in stock and maintains up-to-date prices on all parts, he will be able to process your order immediately. If, for some reason, the part is not in stock, he will order it from the factory. In either event, he maintains a current file of service manuals, which give all available parts ordering or technical information.

All prices are FOB factory in Muscatine, Iowa. Shipping charges are added to the price of the part shipping from the factory.

WHERE TO ORDER

Always order parts from the dealer who sold you your BT Prime-Mover®. If it is necessary for the dealer to order parts from the factory, he is able to get prompt service for you. Parts are shipped in accordance with shipping instructions given on the order.

INSTRUCTIONS FOR RETURNING PARTS

Under **NO CIRCUMSTANCES** will parts be accepted at the factory for credit without prior approval. BT Prime-Mover® cannot accept responsibility for parts returned without authorization.

If you have some parts which must be returned, contact your dealer. If he believes parts should be returned, he will arrange for authorization to return the parts.

FIELD MODIFICATIONS

The regulations imposed by OSHA make it mandatory that alteration of industrial trucks be done only as approved in advance and in writing by the manufacturer. Their regulations apply to counter-weighting, changes in masts when such changes affect capacity and any other safety modifications. It is mandatory that nameplate and instructions be changed accordingly (1910.178 (a)(4)).

BT Prime-Mover® will review such changes requested as we can properly evaluate and rerate as to capacity. A change will be evaluated upon receipt of a written request which includes truck and mast serial number and a deescription of all proposed changes.

If the change is approved, authorization will be sent, as will new nameplates or other labeling where appropriate. The new nameplates should be installed over the earlier nameplate.

The modifier should send confirmation of the change to the factory along with pictures of the revised truck.

EXPLANATION OF SERIAL NUMBER

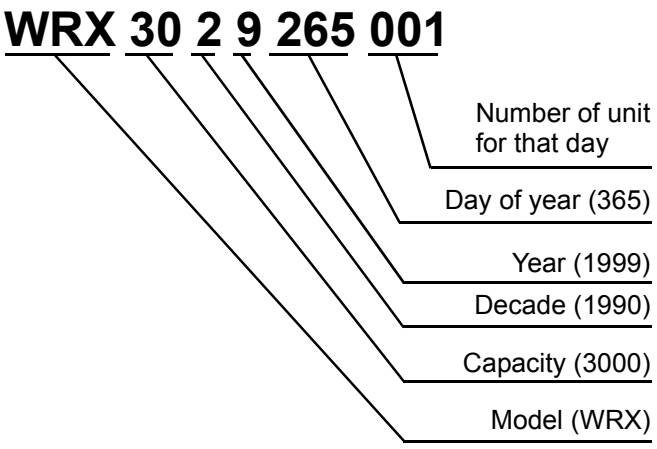

© BT Prime-Mover, Inc.

Return

GENERAL INFORMATION

INDEX

This parts manual is arranged for easy identification of parts. The index at the front of the catalog gives location of major groups and assemblies.

ABBREVIATIONS AND TERMS

NA	Not Available
NSS	Not Sold Separately
As Req'd	Use as required
K	Parts of a kit
*	Not shown on drawing
----------	See elsewhere for further break down of parts.

CHANGES

When changes are made to the machine, revised pages for this manual will be issued. These pages must be inserted in your parts manual as soon as they are received. Failure to keep your parts manuals up to date will result in confusion and may cause you to order wrong parts.

RIGHT-HAND AND LEFT-HAND SIDES

The terms right-hand and left-hand used in this parts manual indicate the right and left side of the machine as viewed from the operator's line of sight for proper operation of machine or attachment.

A. Right Side
B. Rear
C. Left Side
D. Forward

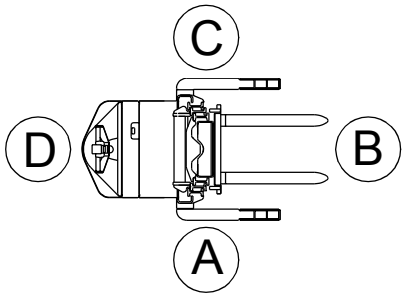

PART LIST

The **ITEM #**, describes the item on the figure you are looking at. The **PART #** is a numerical description of the item and the part ordering number. The **NAME** is a description of the part number in alphabetical form. The **# FOR ASSY.** is the quantity used on the figure and **NOT** the quantity used on the machine. The **UNIT** describes the type or style of the part used on the figure.

EXAMPLE:

ITEM #	PART #	NAME	# FOR ASSY.	UNITS
12	30354-32	Hose assembly, 89/180	1	89/180
12	30354-33	Hose assembly, 95/198	1	95/198
12	30354-34	Hose assembly, 108/226	1	108/226
12	30354-35	Hose assembly, 111/240	1	111/240
12	30354-36	Hose assembly, 119/258	1	119/258
13	15898-03	Fitting, bulkhead	1	
14	40041-00	Tube assembly	1	
15	40108-00	Fuse	1	
16K	NSS	Ring	1	
17	40005-00	Pin	1	
18	11205-15	Bearing	1	
19	11143-03	Screw, cap	1	
20	----------	Cylinder, freelift	1	
21	52-05069-00	Hose (3 feet)	As Req'd	
22	----------	Motor, pump	1	
23	200037	Pump assembly, lift	1	
24K	NSS	Pump, lift	1	
25	NA	Plug	1	
K	200028	Kit, seal (Contains Items Marked With “K”)	1	

© BT Prime-Mover, Inc.

Return

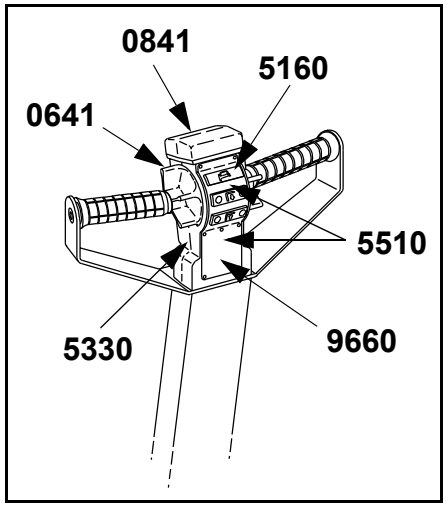

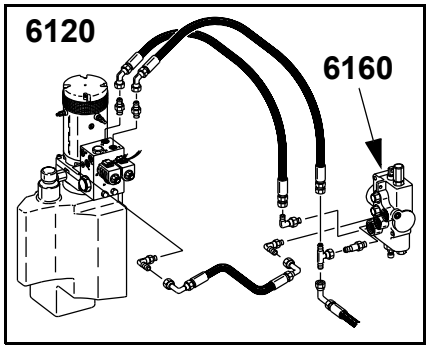



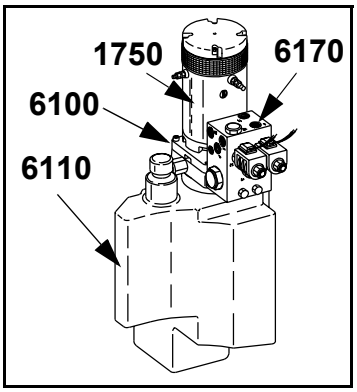

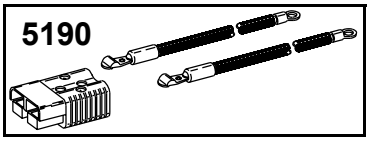

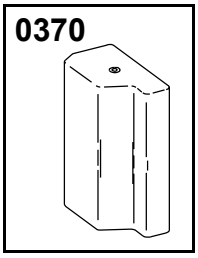

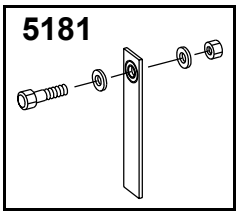

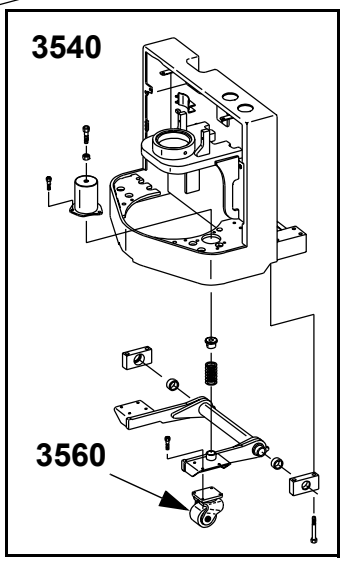

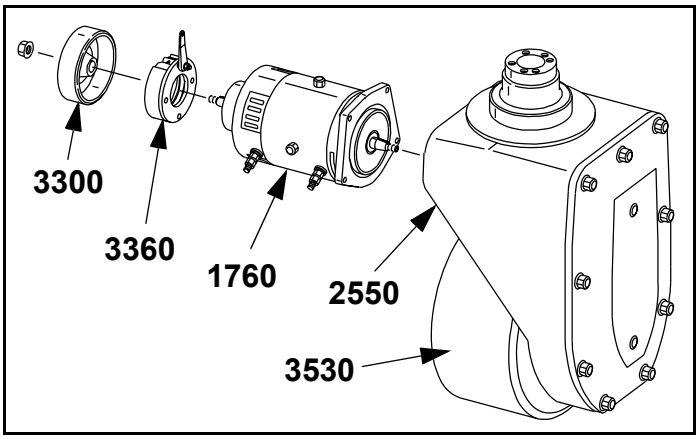

© BT Prime-Mover Inc.

Return

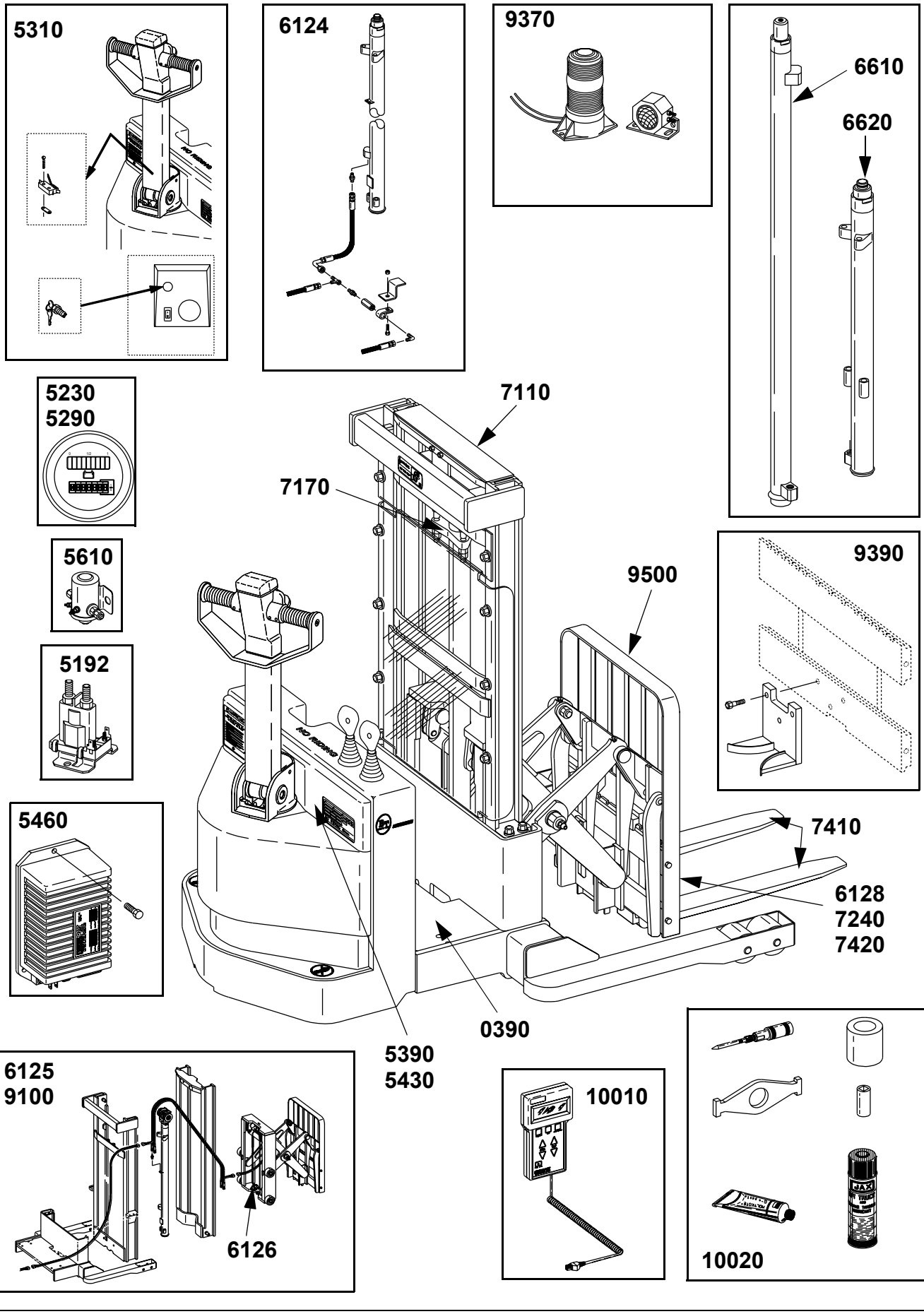

© BT Prime-Mover Inc.

Return

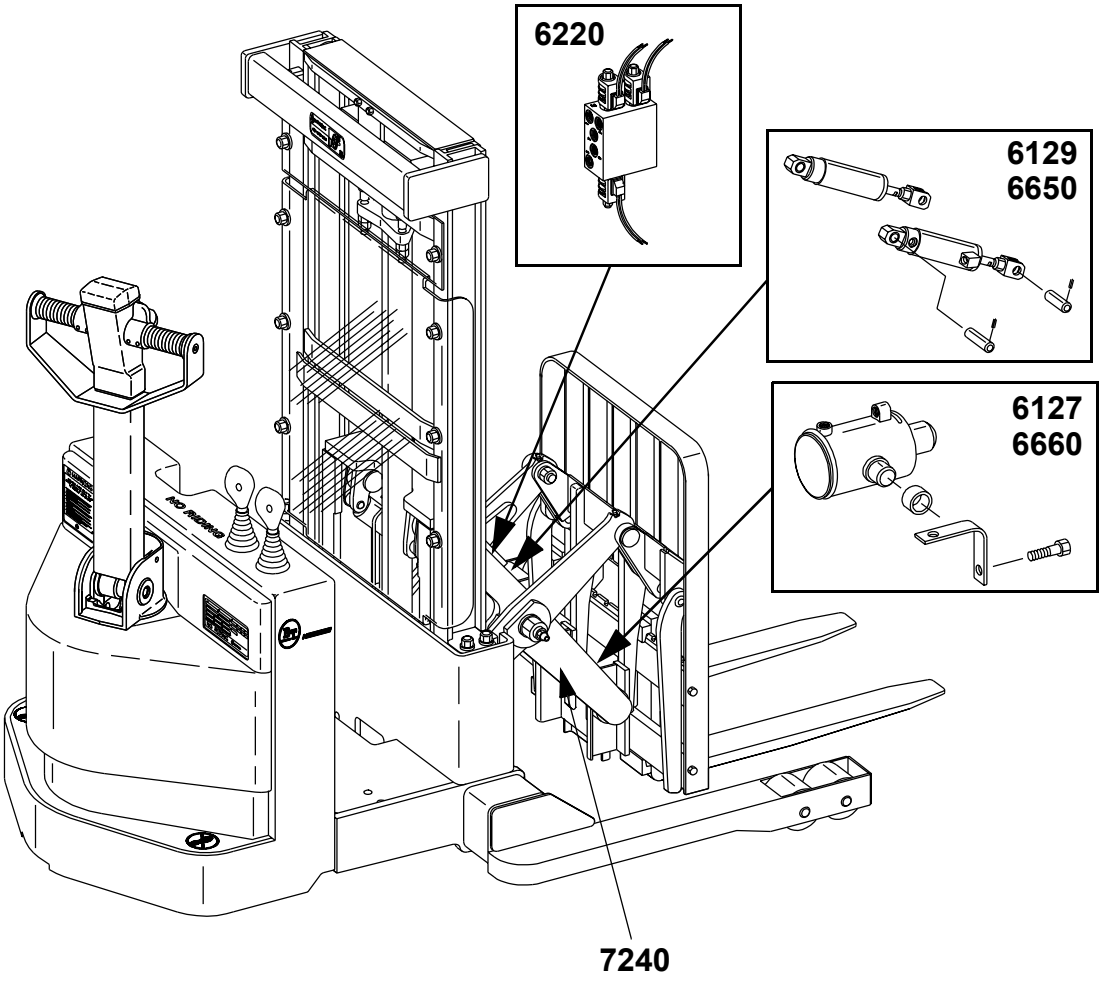

© BT Prime-Mover Inc.

Return

0000

Chassis

0300-000 Frame / Chassis 13
0340-000 Inspection covers 15
0342-000 Inspection covers (“EE” electrical box) 17
0370-000 Counter balance weight 19
0390-200 Battery compartment parts (13.3 in. [338 mm] battery) 21
0640-000 Drivers controls (Two spool valve handle) 23
0641-000 Drivers controls (Speed and direction) 25
0820-000 Finger / toe guards 27
0840-000 Driver protection (Reverser) 29
0850-001 Signs, warnings Serial Number 31136001 - UP 31

1000

Motors

1750-000 Pump motor 35
1760-001 Drive motor Serial Number 27108001 - UP 37

2000

Transmission / Drive Gear

2550-000 Mechanical drive gear unit 41

3000

Brake / Wheel System

3300-000 Parking brake system 45
3360-000 Brake drum/disc assembly 47
3530-000 Drive wheel 49
3540-000 Support / swivel wheel 51
3550-000 Load wheels 53
3560-000 Caster assembly 55

4000

Steering System

4110-001 Steering arm / wheel (Tiler arm) Serial Number 27324000 - UP 59
4111-000 Steering arm / wheel (Head) 61
4180-000 Steering / radial bearing 63

© BT Prime-Mover Inc.

Return

5000

Electrical System

5161-000 Horn 67
5180-000 Static strap 69
5190-000 Battery connector 71
5191-000 Battery pack connector 73
5192-000 200 Amp system line contactor 75
5192-100 300 Amp system line contactor 77
5230-000 Voltage / battery indicator 79
5290-000 Hourmeter / speedometer 81
5310-000 Start / stop switch 83
5330-000 Speed controls 85
5390-001 Control cables / harnesses 87
5430-000 Motor power cables 89
5460-000 Transistor panel 91
5510-000 Micro switches 93
5590-000 Control cables, harness (Two stage mast) 95
5590-100 Control cables, harness (Three stage mast) 97
5610-000 Pump contactor 99
5910-000 Control circuit breaker 101
5911-000 Power circuit breaker 103

6000

Hydraulic System

6100-000 Hydraulic pump (Model # DM-1005) 107
6100-001 Hydraulic pump (Model # DM-1006) 109
6110-001 Hydraulic tank 111
6120-001 Hoses, pipes, connections, mounting points 113
6124-001 Two stage mast lines Serial Number 27029001 - UP 115
6124-100 Three stage mast lines 117
6125-100 Two stage mast reach supply lines 119
6125-200 Three stage mast reach supply lines 121
6126-001 Two Stage reach supply lines 123
6126-100 Three Stage reach supply lines 125
6127-002 Reach, tilt cylinder hoses Serial Number 29125001 - UP 127
6128-002 Reach, sideshifter cylinder hoses Serial Number 29125001 - UP 129
6129-001 Reach, reach cylinders hoses 131
6160-100 Two spool control valve 133
6170-000 Pressure / flow control valve 135
6220-002 Control valve with No Sideshifter Serial Number 30348001 - UP 137
6220-102 Control valve With Sideshifter Serial Number 30348001 - UP 139
6610-100 Two stage mast lift cylinder 141
6610-200 Three stage mast staging cylinder 143
6620-200 Three stage mast freelift cylinder 145
6650-002 Reach cylinder assembly Serial Number 29060001 - UP 147
6660-001 Tilt Cylinder assembly Serial Number 28257001 - UP 149

© BT Prime-Mover Inc.

Return

7000

Operating Function - Lifting Device

7110-000 Two stage mast 153
7110-100 Three stage mast 155
7170-000 Two / Three stage mast lifting gear 157
7210-001 Sideshifter assembly Serial Number 28077002 - UP 159
7241-003 Reach assembly Serial Number 29125001 - UP 161
7410-001 Fork assembly 163

8000

Peripheral / Installation Equipment

9000

Options / Attachments

9370-001 Warning lights / alarm 169
9390-000 Positioning equipment 171
9500-000 Extra mechanical equipment 173
9660-000 Electrical heater 175

10000

Tools

10010-000 Electrical controllers (Handset) 179
10020-000 Special tools and lubrications 181

11000

Alphabetical/Numerical Index

Alphabetical Index 185
Numerical Index 191

© BT Prime-Mover Inc.

Return

0000
Chassis

© BT Prime-Mover Inc.

Return

0300-000

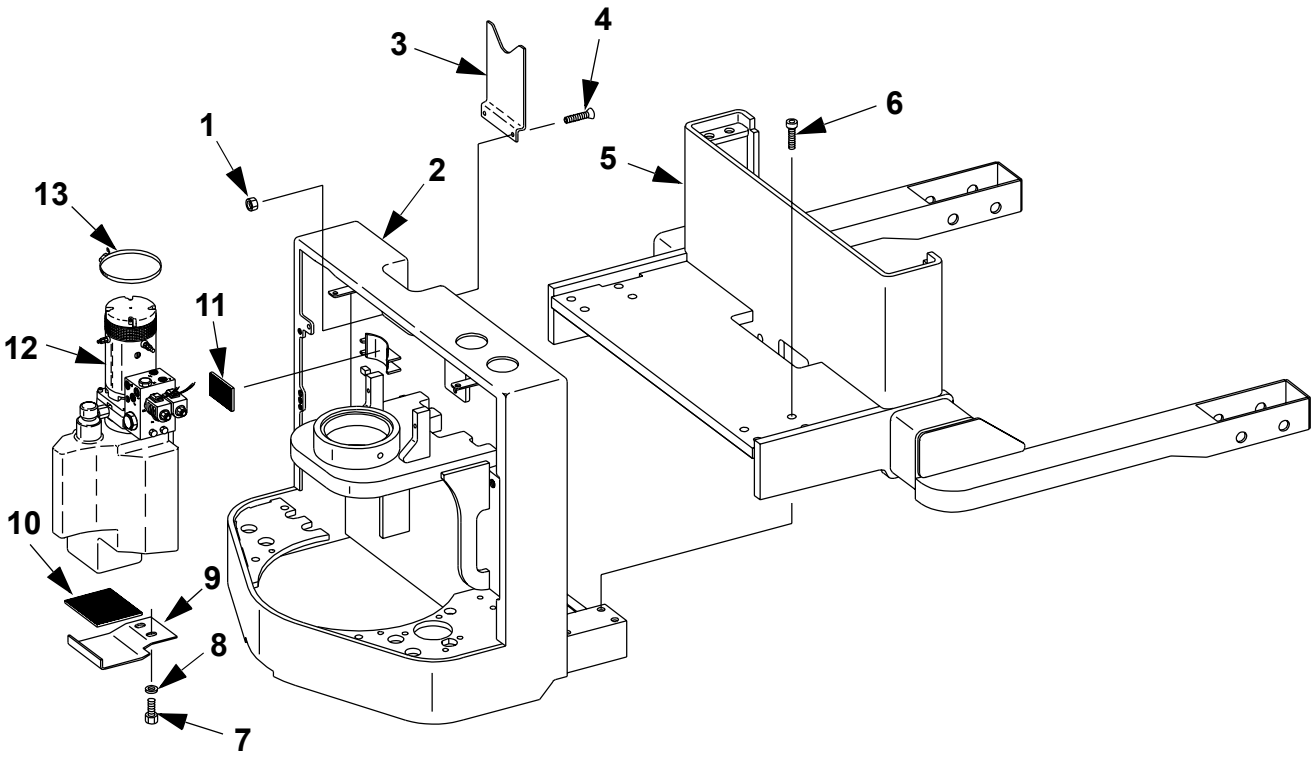

© BT Prime-Mover, Inc.

Return

0300-000 Frame / Chassis

ITEM #	PART #	NAME	# FOR ASSY.	UNITS
1	301960-008	Nut	2	
2	----------	Frame, carrier **(State Model & Serial Number)**	1	
3	302153-000	Pocket	1	
4	301922-020	Screw, flat socket head	2	
5	----------	Frame, carrier **(State Model & Serial Number)**	1	
6	305141-035	Screw, socket hd **(Torque 147 ft/lbs [200 N•m])**	8	
7	28336	Screw, cap	2	
8	50000-17	Washer, flat	2	
9	304659-000	Support	1	
10	305633-000	Cushion	1	
11	305632-000	Cushion	1	
12	----------	Pump assembly (See Fig.# 6110-001)	1	
13	305009-000	Clamp	1	

© BT Prime-Mover, Inc.

0340-000

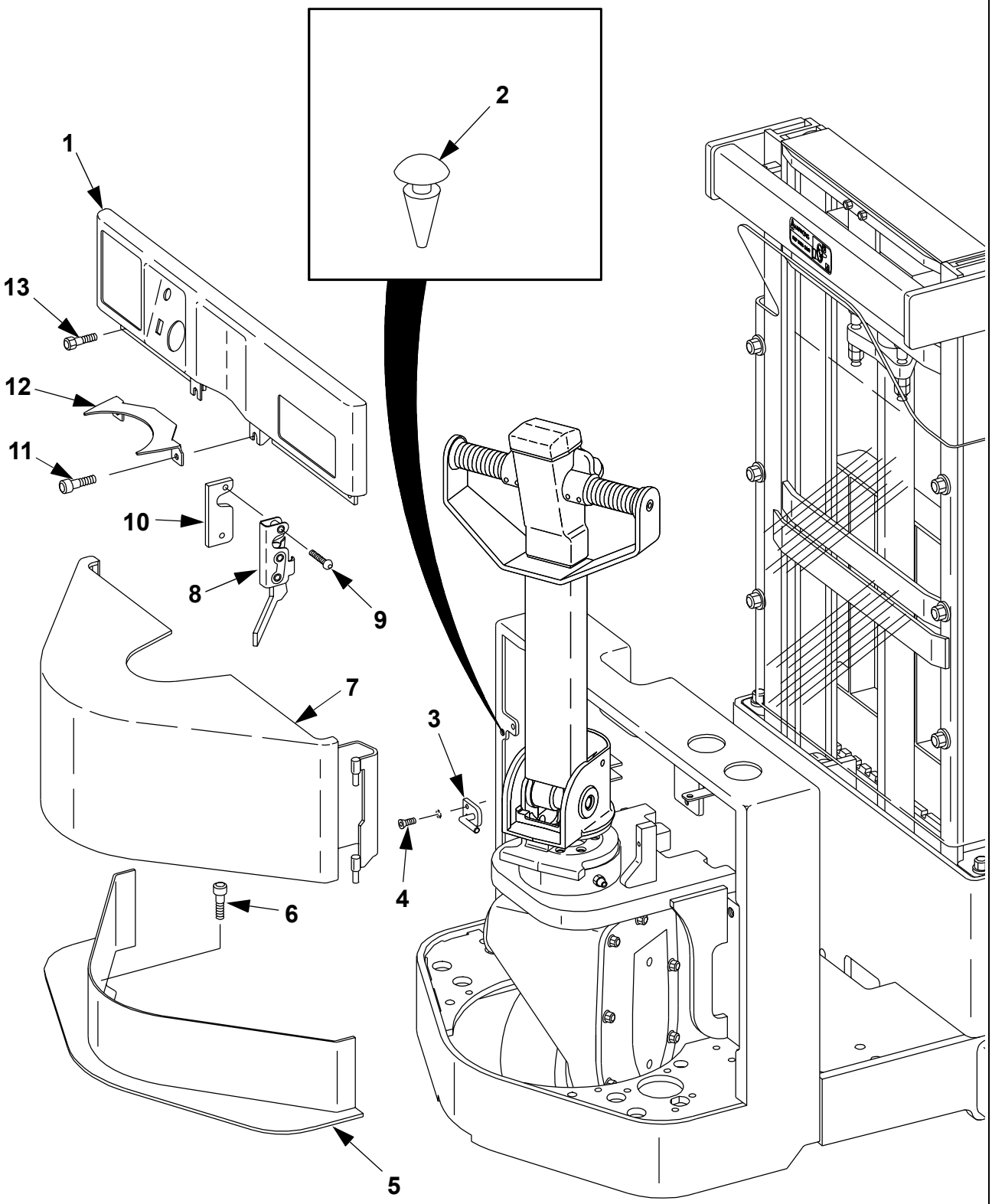

© BT Prime-Mover, Inc.

0340-000 Inspection covers

ITEM #	PART #	NAME	# FOR ASSY.	UNITS
1	301844-000	Console	1	
2	302069-000	Bumper, door	2	
3	304574-000	Latch	1	
4	301922-016	Screw, flat socket head	2	
5	306858-000	Panel, kick	1	
6	301955-016	Screw, socket	2	
7	306239-000	Door	1	
8	301802-000	Latch	1	
9	301652-030	Screw, locking	1	
10	302060-000	Plate, latch	2	
11	301652-025	Screw, cap	2	
12	301882-000	Plate	1	
13	301827-020	Screw	2	

© BT Prime-Mover, Inc.

0342-000

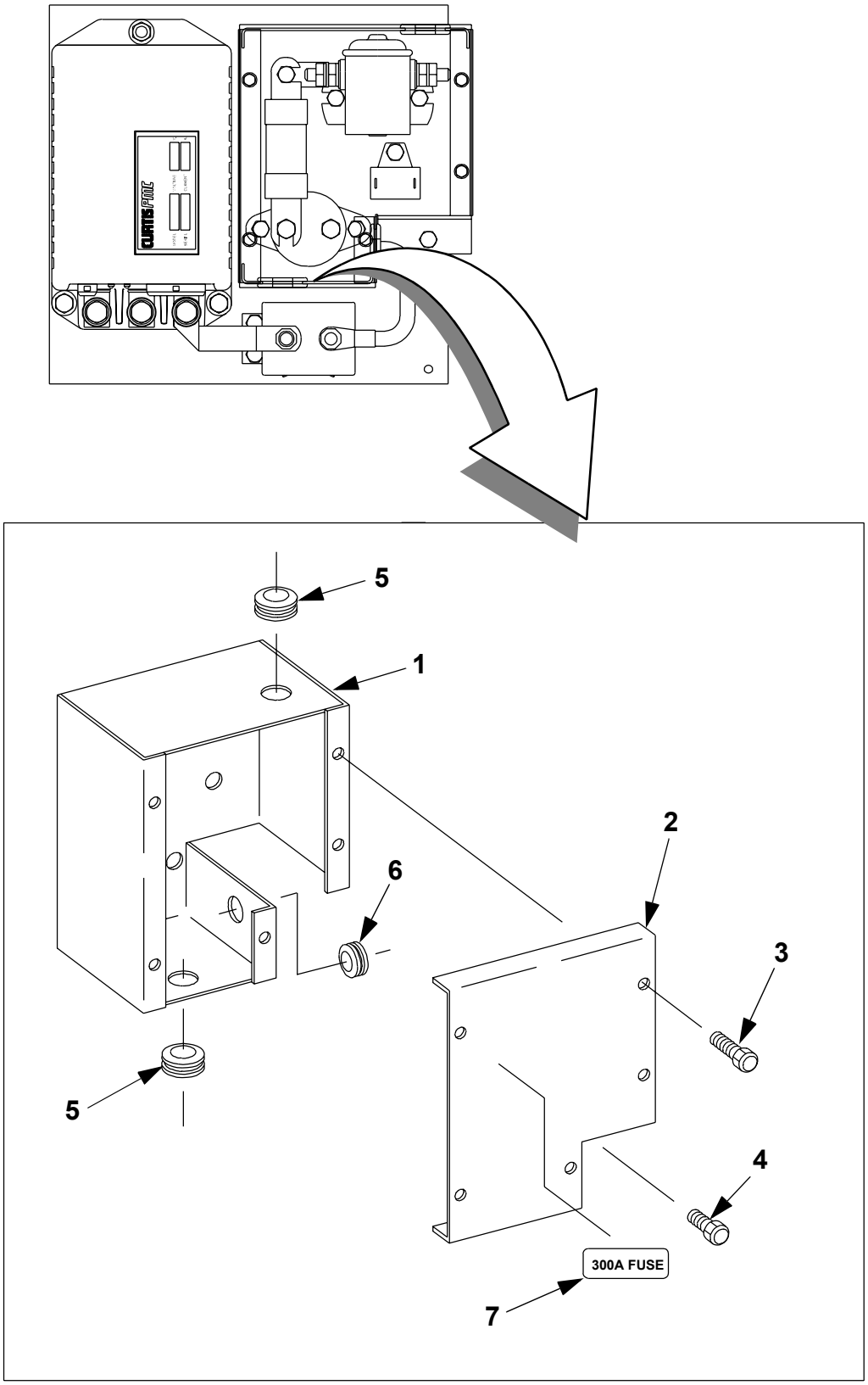

© BT Prime-Mover, Inc.

0342-000 Inspection covers ("EE" electrical box)

ITEM #	PART #	NAME	# FOR ASSY.	UNITS
1	305971-000	Box, **"EE"**	1	**"EE"**
2	305972-000	Lid, **"EE"**	1	**"EE"**
3	301825-010	Screw, cap **"EE"**	5	**"EE"**
4	301951-010	Screw, cap **"EE"**	1	**"EE"**
5	11813-15	Grommet **"EE"**	2	**"EE"**
6	11813-14	Grommet **"EE"**	1	**"EE"**
7	29410-00	Decal, **300 AMP "EE"**	1	**"EE"**

© BT Prime-Mover, Inc.

0370-000

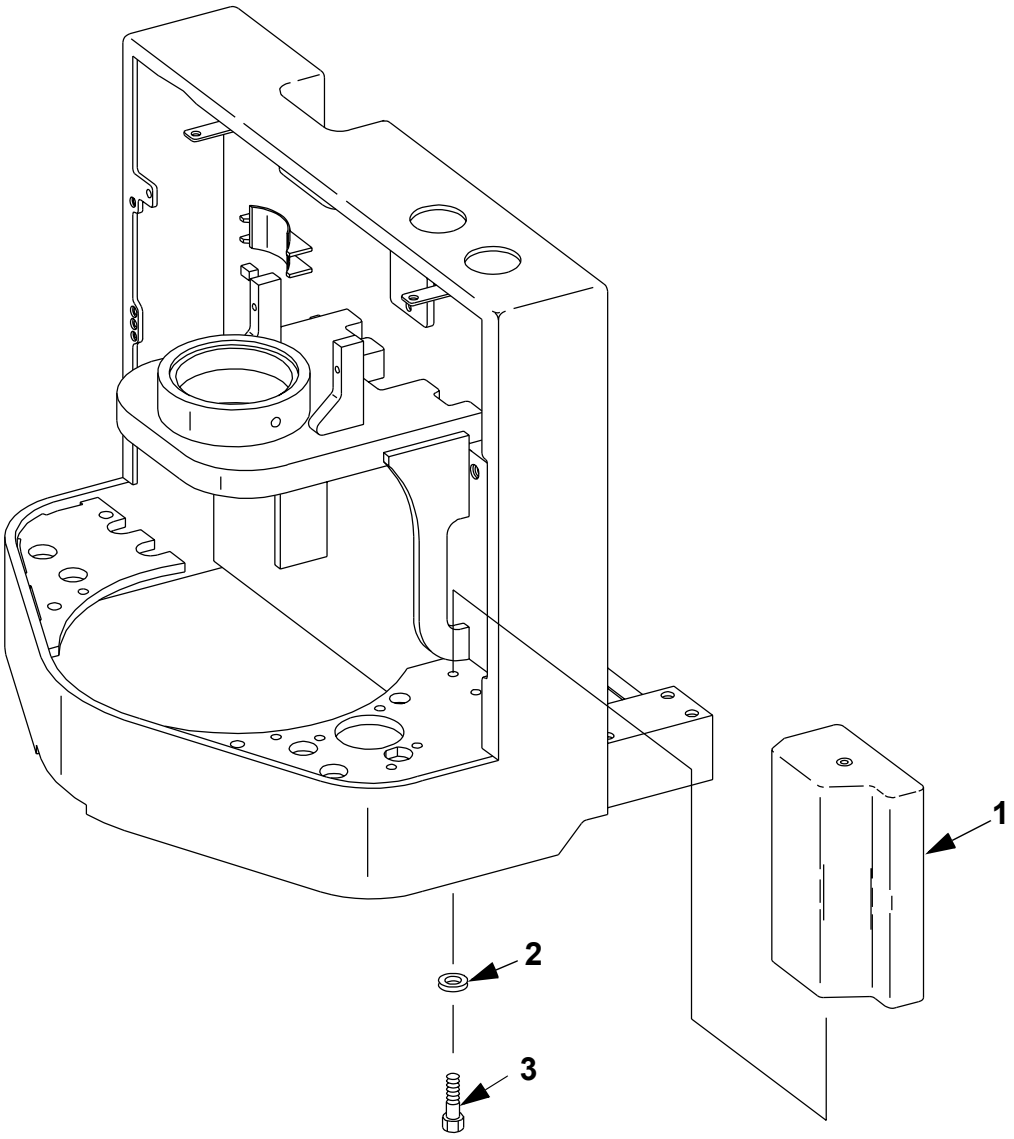

© BT Prime-Mover, Inc.

0370-000 Counter balance weight

ITEM #	PART #	NAME	# FOR ASSY.	UNITS
1	304647-000	Counterweight **(90 lb [40.8 kg])**	1	**90 lbs.**
2	50000-15	Washer, flat	2	
3	301957-035	Screw, cap	2	

© BT Prime-Mover, Inc.

0390-200

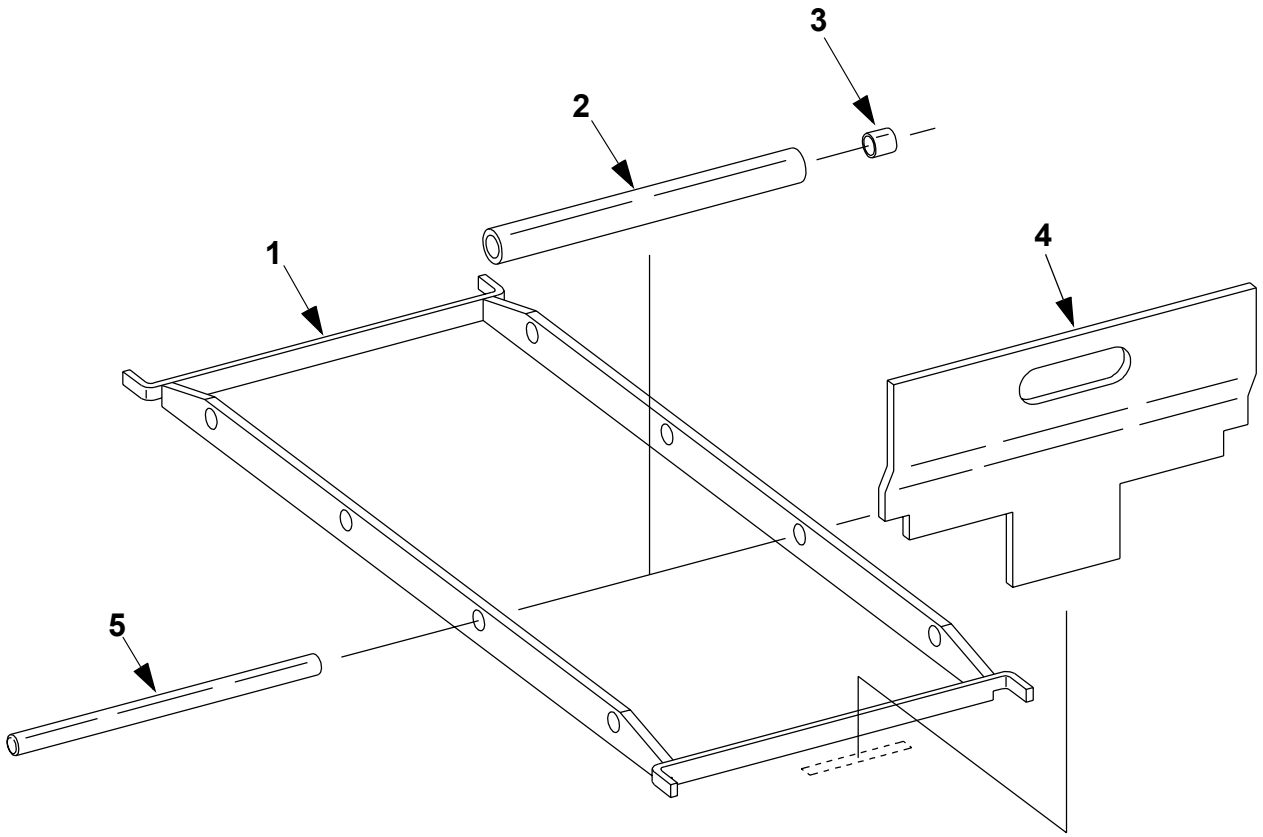

© BT Prime-Mover, Inc.

Return

0390-200 Battery compartment parts (13.3 in. [338 mm] battery)

ITEM #	PART #	NAME	# FOR ASSY.	UNITS
1	305042-000	Frame, battery roller	1	
2	25204-09	Roller, battery	4	
3	25189-02	Bearing	8	
4	304783-000	Door, battery	2	
5	25203-09	Shaft, roller	4	

© BT Prime-Mover, Inc.

0640-000

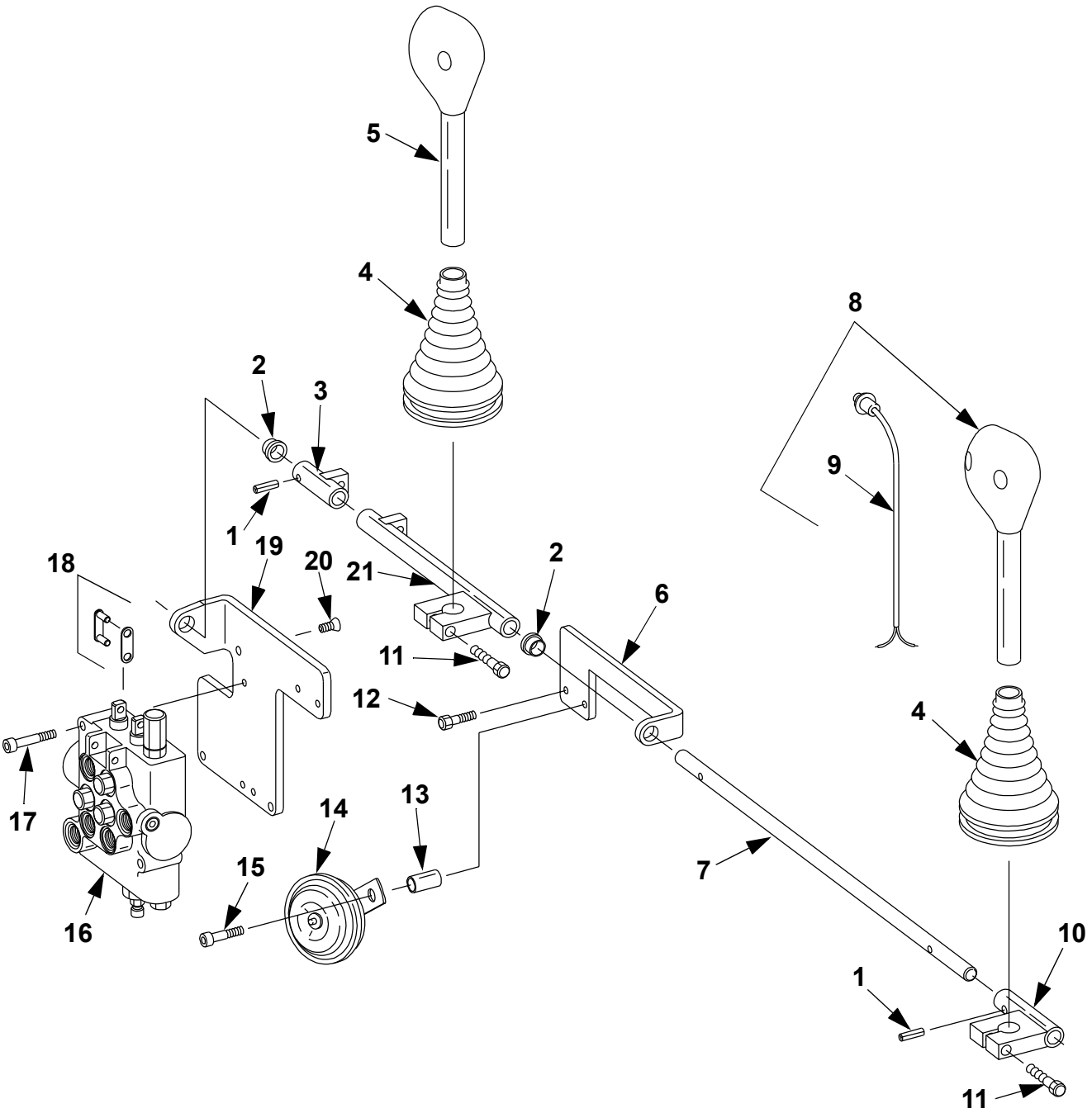

© BT Prime-Mover, Inc.

0640-000 Drivers controls (Two spool valve handle)

ITEM #	PART #	NAME	# FOR ASSY.	UNITS
1	11073-24	Pin, roll	2	
2	11695-06	Bushing, flanged	2	
3	304653-000	Tube	1	
4	305862-000	Boot	2	
5	305858-000	Knob, lift/lower	1	
6	304634-000	Bracket	1	
7	304648-000	Shaft	1	
8	306341-000	Knob, auxiliary (Reach & Tilt)	1	
8	306342-000	Knob, auxiliary (Reach & Tilt & Sideshifter &)	1	
8	306342-001	Knob, auxiliary (Reach & Tilt & 1 Aux. Function)	1	
9	305861-000	Switch	As Req'd.	
10	304655-000	Handle	1	
11	301652-030	Screw, cap	2	
12	301652-025	Screw, cap	2	
13	----------	Bushing (See Fig.# 5161-000)	1	
14	----------	Horn (See Fig.# 5161-000)	1	
15	----------	Screw (See Fig.# 5161-000)	1	
16	----------	Valve assembly, two spool (See Fig.# 6160-100)	1	
17	20055	Screw, cap	2	
18	14813-00	Link	2	
19	304633-000	Bracket	1	
20	301922-014	Screw, flat head	3	
21	304654-000	Tube	1	

© BT Prime-Mover, Inc.

0641-000

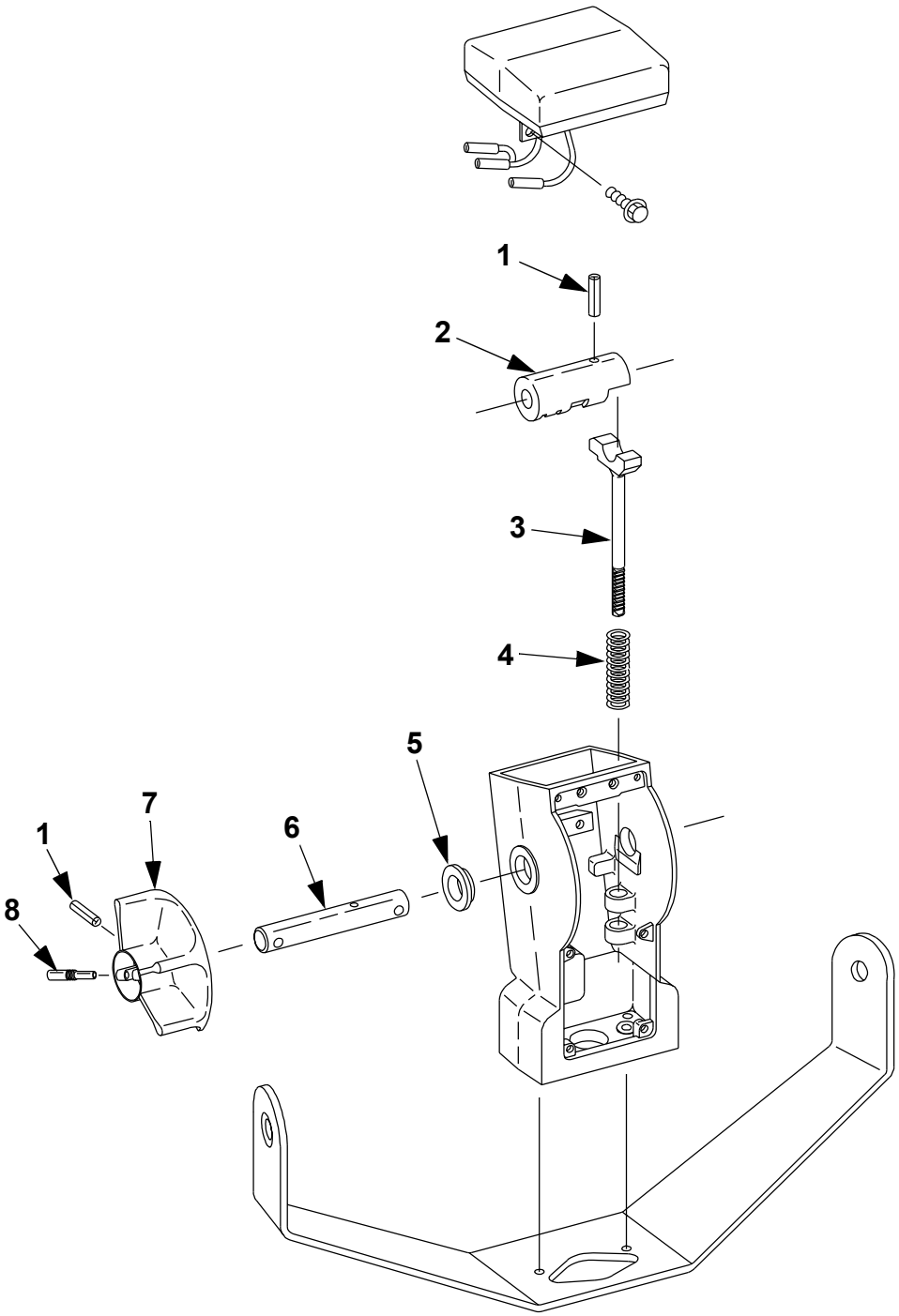

© BT Prime-Mover, Inc.

0641-000 Drivers controls (Speed and direction)

ITEM #	PART #	NAME	# FOR ASSY.	UNITS
1	301964-032	Pin, roll	3	
2	109631	Cam	1	
3	101216	Return	1	
4	46490	Spring, return	1	
5	307444-000	Bushing	2	
6	301780-000	Shaft, cam	1	
7	301718-000	Control, thumb	2	
8	301779-000	Pin, threaded	2	

© BT Prime-Mover, Inc.

0820-000

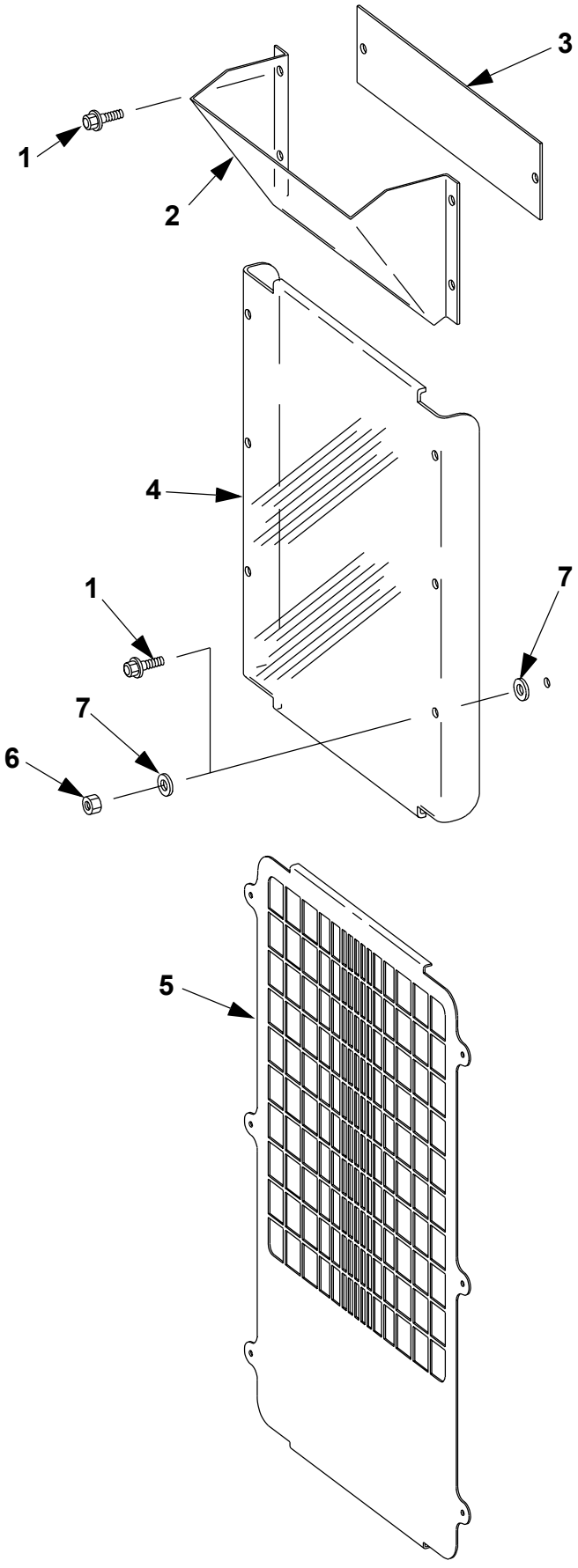

© BT Prime-Mover, Inc.

0820-000 Finger / toe guards

ITEM #	PART #	NAME	# FOR ASSY.	UNITS
1	29544	Screw	As Req'd.	
2	306774-001	Shield, upper **Three Stage Mast**	1	
3	306877-001	Shield, top 71/100" **Two Stage Mast**	1	
4	306264-003	Windshield, 71/100" **Two Stage Mast**	1	
4	306264-004	Windshield, 83/124" **Two Stage Mast**	1	
4	306264-005	Windshield, 95/150" **Two Stage Mast**	1	
4	306067-002	Windshield, 71/150" **Three Stage Mast**	1	
4	306067-003	Windshield, 83/180" **Three Stage Mast**	1	
4	306067-003	Windshield, 87/189" **Three Stage Mast**	1	
5	306149-000	Screen, 71/100" **Two Stage Mast**	1	
5	306150-000	Screen, 83/124" **Two Stage Mast**	1	
5	306277-000	Screen, 95/150" **Two Stage Mast**	1	
5	306275-000	Screen, 71/150" **Three Stage Mast**	1	
5	306360-000	Screen, 83/180" **Three Stage Mast**	1	
5	306360-000	Screen, 87/189" **Three Stage Mast**	1	
6	301960-008	Nut	As Req'd.	
7	307334-000	Washer	As Req'd.	

© BT Prime-Mover, Inc.

0840-000

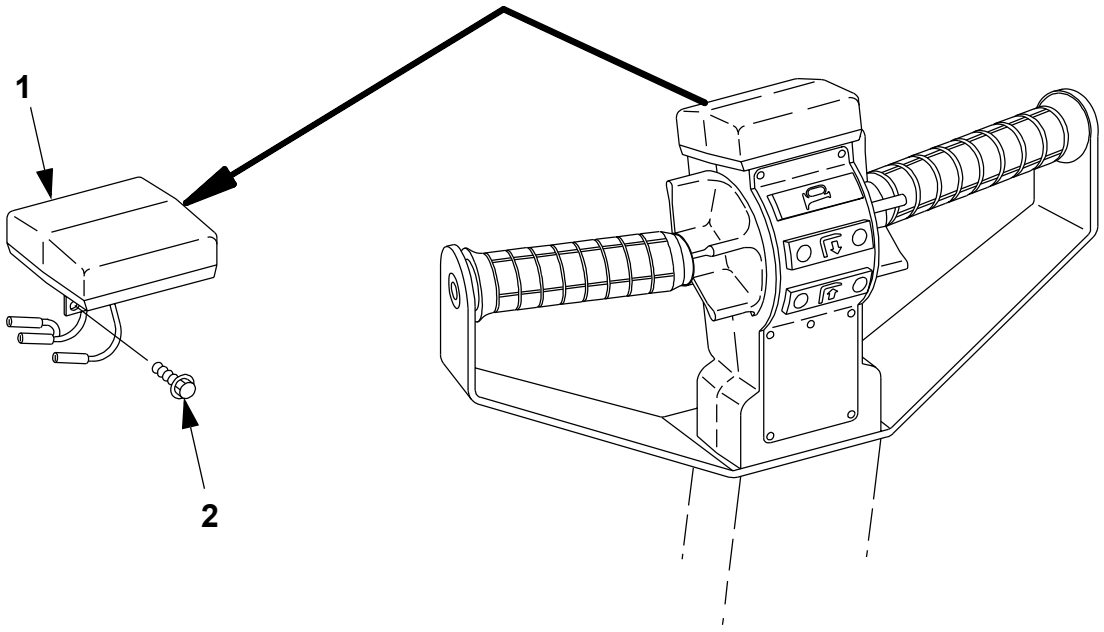

© BT Prime-Mover, Inc.

0840-000 Driver protection (Reverser)

ITEM #	PART #	NAME	# FOR ASSY.	UNITS
1	305990-000	Reverser assembly (3 Wire)	1	
2	301825-010	Screw	2	

© BT Prime-Mover, Inc.

0850-001 Effective Serial Number 31136001 - UP

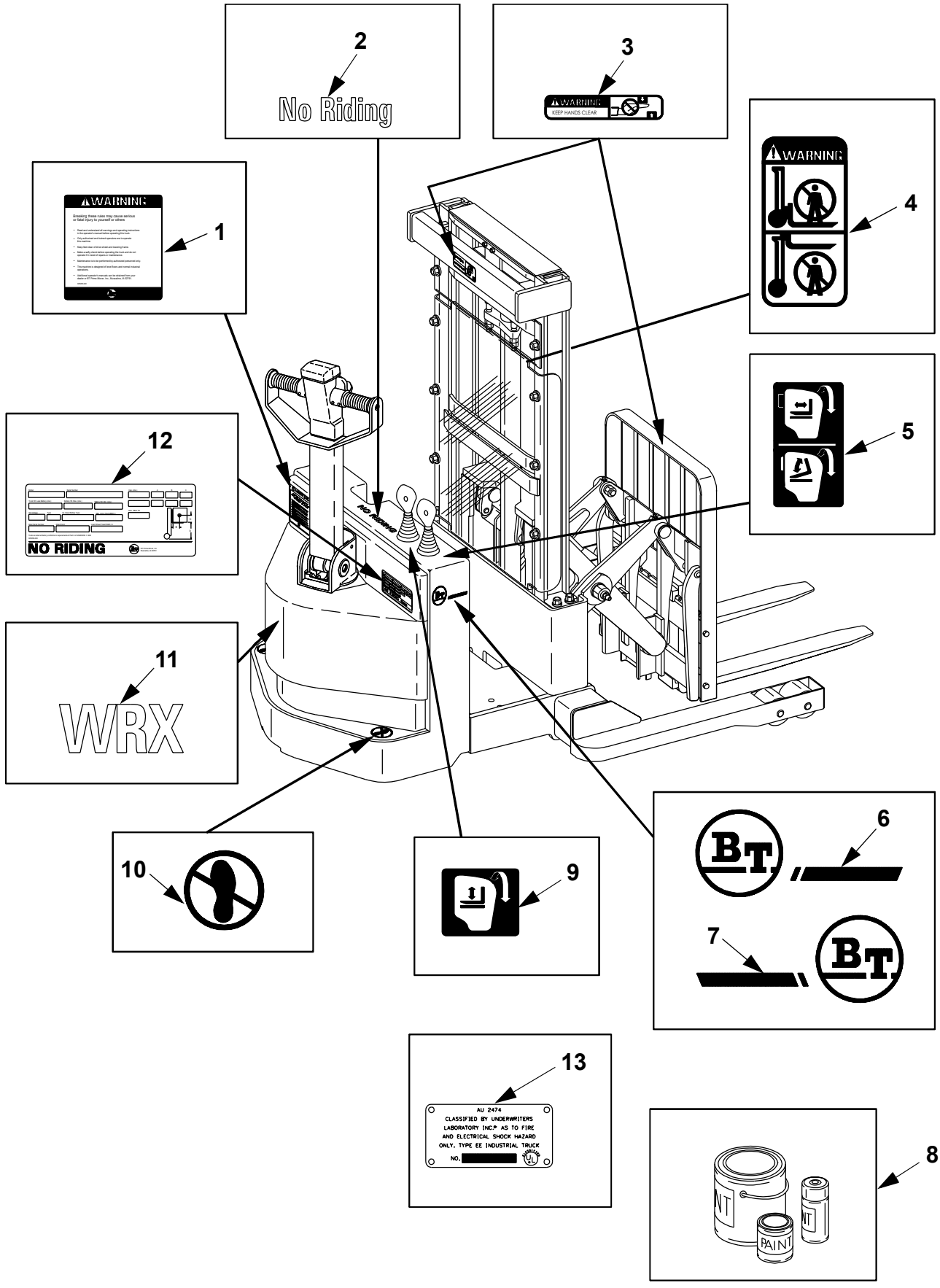

© BT Prime-Mover, Inc.

0850-001 Signs, warnings Serial Number 31136001 - UP

ITEM #	PART #	NAME	# FOR ASSY.	UNITS
1	305955-000	Decal, **WARNING**	1	
2	304597-000	Decal, **NO RIDING**	2	
3	307500-000	Decal, **WARNING**	2	
4	309733-000	Decal, **WARNING**	2	
5	306419-000	Decal, **Reach/Tilt**	1	
5	306420-000	Decal, **Reach/Tilt/Sideshifter**	1	
5	306420-001	Decal, **Reach/Tilt/Auxiliary**	1	
6	151847	Decal, **Right BT LOGO**	1	**Right**
7	151848	Decal, **Left BT LOGO**	1	**Left**
7	52-00279-00	Paint, **BT RED**	As Req'd.	
7	52-00257-00	Spray, **BT RED**	As Req'd.	
7	52-00220-00	Paint, **BT BLACK** semi gloss	As Req'd.	
7	52-00224-00	Spray, **BT BLACK** semi gloss	As Req'd.	
7	52-00237-00	Paint, **SAFETY YELLOW**	As Req'd.	
7	52-00260-00	Spray, **SAFETY YELLOW**	As Req'd.	
7	52-00247-00	Paint, **SAFETY ORANGE**	As Req'd.	
8	52-00276-00	Spray, **SAFETY ORANGE**	As Req'd.	
9	306418-000	Decal, **Raise/Lower**	1	
10	305507-000	Decal, **NO STEP**	2	
11	305023-000	Decal, **WRX**	1	
12	NSS	Plate, **DATA**	1	
13	NSS	Plate, **UL**	1	
*	304955-000	Manual, **WRX-30 Master Parts**	1	
*	304956-000	Manual, **CSX/WSX/WRX Master Service**	1	
*	----------	Manual, **WRX-30 Operator's**	1	
*	----------	Manual, **WRX-30 Parts**	1	

© BT Prime-Mover, Inc.

This page intentionally left blank

© BT Prime-Mover Inc.

Return

1000
Motors

© BT Prime-Mover Inc.

Return

1750-000

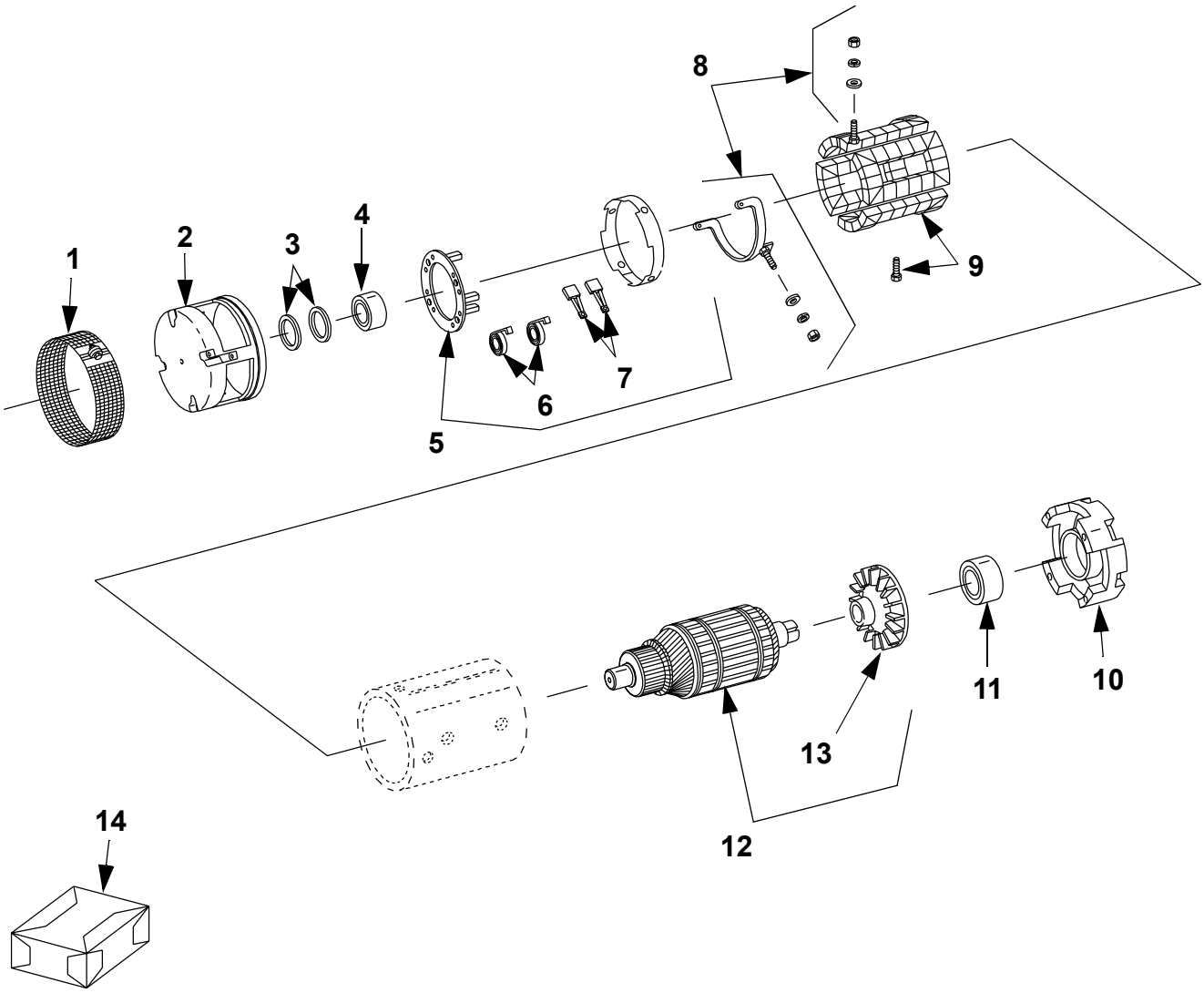

© BT Prime-Mover, Inc.

Return

1750-000 Pump motor

ITEM #	PART #	NAME	# FOR ASSY.	UNITS
*	306010-000	Pump Motor Assembly	1	
1	200027	Band, cover	1	
2	200200	Head, commutator end	1	
3	200159	Thrust washer package	1	
4	200310	Bearing, ball sealed	1	
5	200189	Plate assembly, brush	1	
6	200190	Spring set, brush	1	
7	200188	Brush set	1	
8	200150	Terminal stud package	1	
9	306018-000	Coil, field package	1	
10	306019-000	Head, drive end	1	
11	200309	Bearing, ball sealed	1	
12	306017-000	Armature & fan assembly	1	
13	200307	Fan	1	
14	305983-000	Band, **"EE"** cover	1	**"EE"**

© BT Prime-Mover, Inc.

1760-001

Effective Serial Number
27108001 - UP

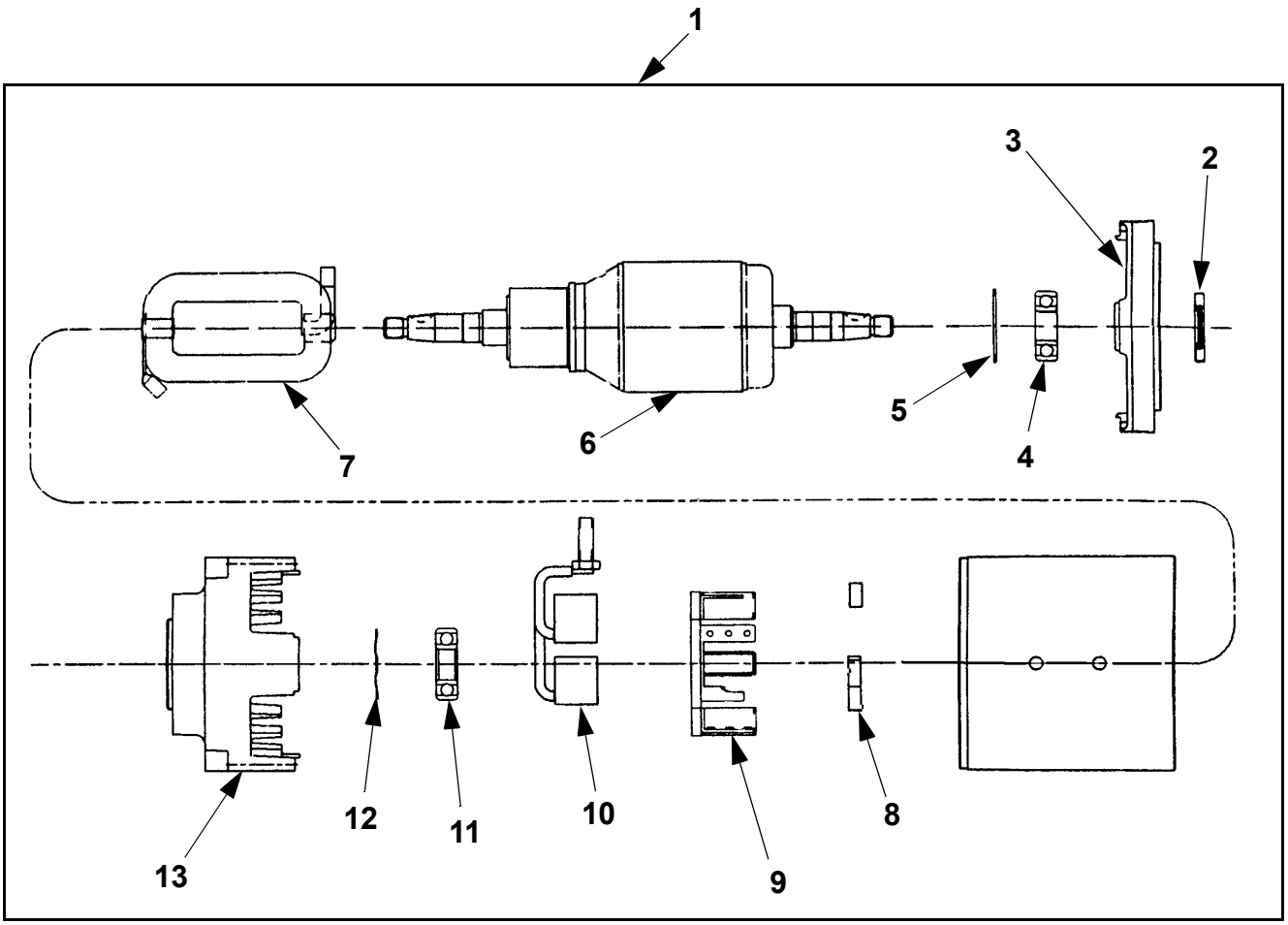

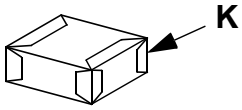

© BT Prime-Mover, Inc.

Return

1760-001 Drive motor Serial Number 27108001 - UP

ITEM #	PART #	NAME	# FOR ASSY.	UNITS
1	305879-000	Drive motor assembly	1	
2	307628-000	Seal	1	
3	307629-000	Endhead, drive	1	
4	307630-000	Bearing	1	
5	307631-000	Retainer	1	
6	307632-000	Armature	1	
7	307633-000	Kit, field coil	1	
8	307635-000	Spring, brush	4	
9	307636-000	Brush box assembly	1	
10	307637-000	Kit, lead assembly	1	
11	307630-000	Bearing	1	
12	307638-000	Washer, spring	1	
13	307639-000	Endhead, commutator	1	
K	305981-000	Kit, coverband	1	**“EE”**

© BT Prime-Mover, Inc.

This page intentionally left blank

© BT Prime-Mover Inc.

Return

2000
Transmission / Drive Gear

© BT Prime-Mover Inc.

Return

2550-000

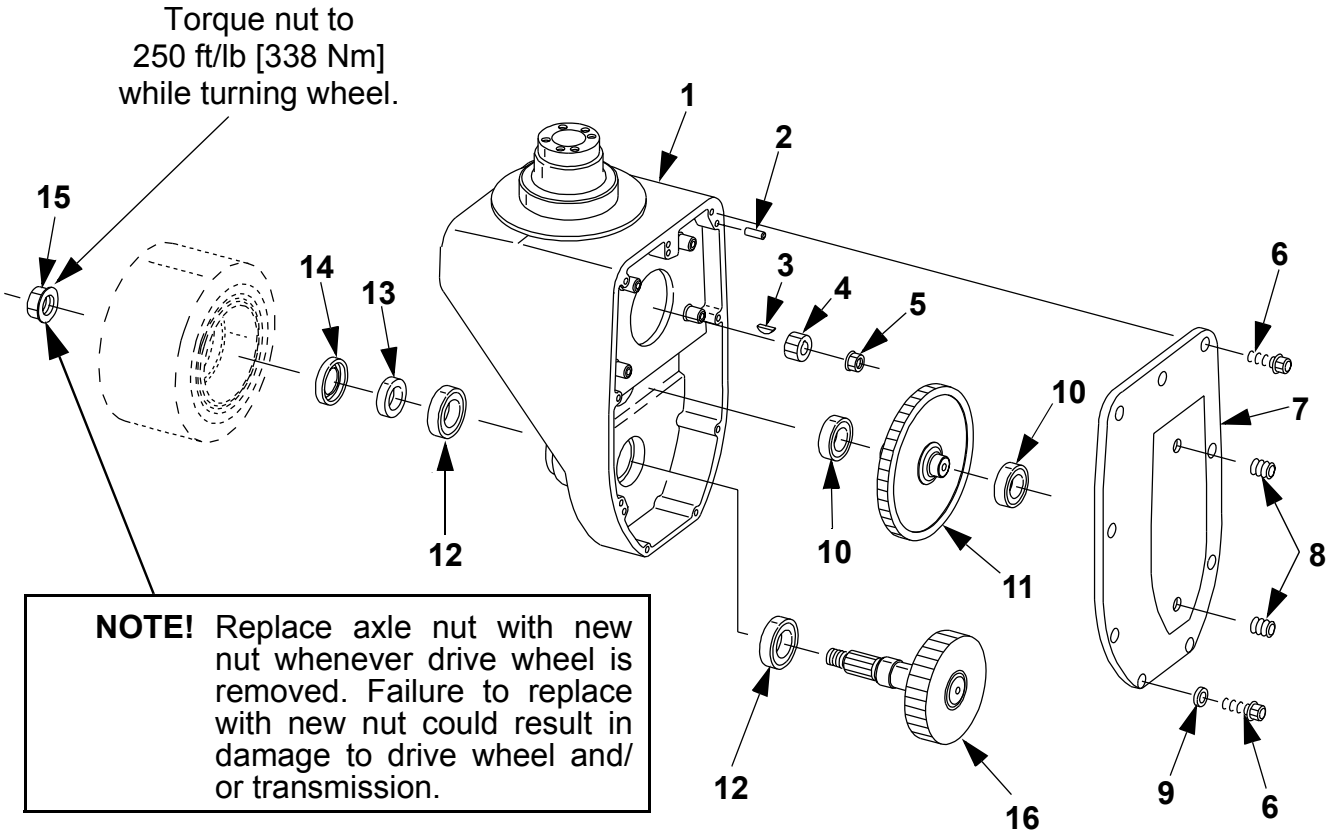

NOTE! Replace axle nut with new nut whenever drive wheel is removed. Failure to replace with new nut could result in damage to drive wheel and/ or transmission.

© BT Prime-Mover Inc.

Return

2550-000 Mechanical drive gear unit

ITEM #	PART #	NAME	# FOR ASSY.	UNITS
*	301633-007	Transmission assembly	1	
1	301580-001	Case, gear	1	
2	11890-09	Pin, dowel	2	
3	11844-02	Key	1	
4	23006-00	Gear, pinion	1	
5	301654-012	Nut, flanged **(Torque 35 ft/lb [47 N•m])**	1	
6	303009-025	Screw, socket head **(Torque 14 ft/lb [18 N•m])**	9	
7	301581-000	Cover, gear case	1	
8	301653-020	Plug, drain/fill pipe	2	
9	11897-05	Washer, sealing	1	
10	11030-21	Bearing, ball	2	
11	301665-000	Gear, idler	1	
12	11205-27	Bearing	2	
13	23007-00	Ring	1	
14	11039-31	Seal	1	
15	164046	Nut, flanged **(Torque 250 ft/lb [338 N•m])**	1	
16	301627-000	Gear, drive	1	

© BT Prime-Mover Inc.

This page intentionally left blank

© BT Prime-Mover Inc.

Return

3000
Brake / Wheel System

© BT Prime-Mover Inc.

Return

3300-000

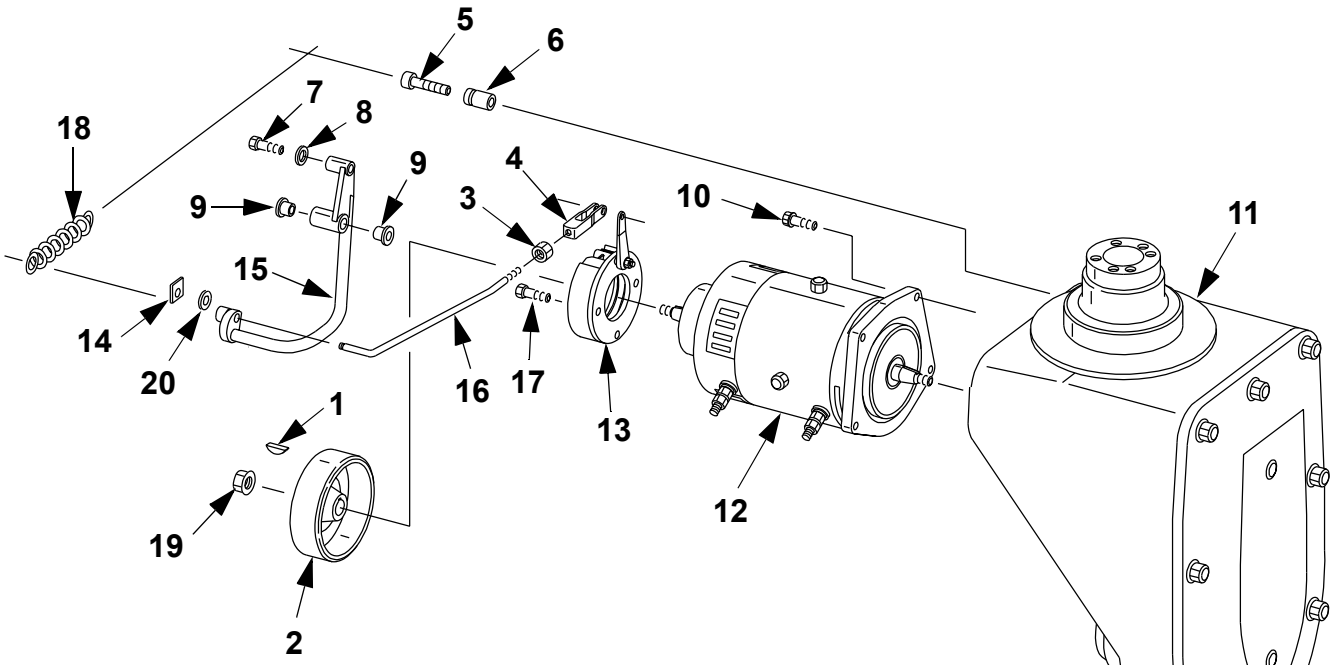

© BT Prime-Mover Inc.

3300-000 Parking brake system

ITEM #	PART #	NAME	# FOR ASSY.	UNITS
1	11844-02	Key	1	
2	23019-00	Drum, brake	1	
3	301960-006	Nut	1	
4	301944-000	Yoke assembly	1	
5	301954-060	Screw, socket head	1	
6	301860-000	Anchor, spring	1	
7	301951-016	Screw, cap	1	
8	301949-000	Bearing, handle	1	
9	11695-05	Bushing	2	
10	303009-000	Screw, socket head **(Torque 14 ft/lb [18 N•m])**	4	
11	----------	Transmission assembly (See Fig.# 2550-000)	1	
12	----------	Drive motor (See Fig.# 1760-001)	1	
13	----------	Brake assembly (See Fig.# 3360-000)	1	
14	301945-006	Retainer	1	
15	301754-000	Linkage, brake	1	
16	305985-000	Rod, push	1	
17	301954-025	Screw, socket head **(Torque 14 ft/lb [18 N•m])**	2	
18	301920-000	Spring	1	
19	301654-012	Nut, flanged **(Torque 35 ft/lb [47 N•m])**	1	
20	20375	Washer	1	

© BT Prime-Mover Inc.

3360-000

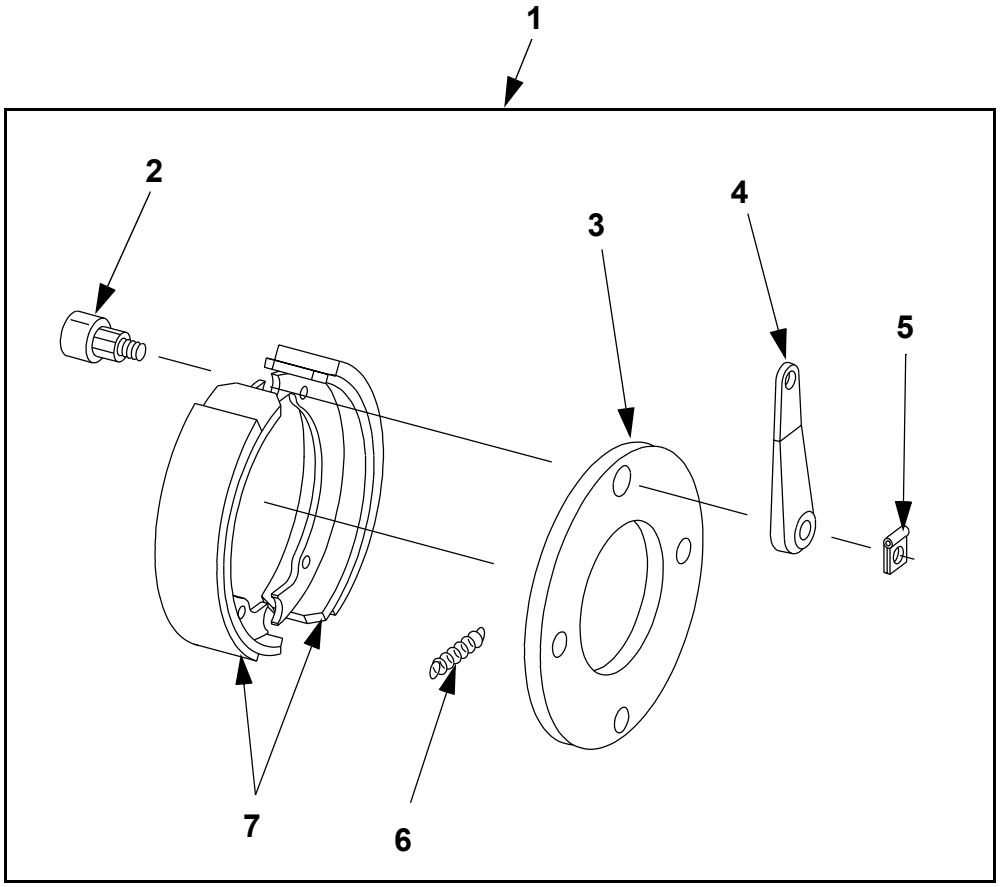

© BT Prime-Mover Inc.

3360-000 Brake drum/disc assembly

ITEM #	PART #	NAME	# FOR ASSY.	UNITS
1	23008-00	Brake assembly	1	
2	300199-000	Cam	1	
3	300200-000	Plate	1	
4	300201-000	Lever	1	
5	300202-000	Clip	1	
6	300204-000	Spring	2	
7	300203-000	Shoe	2	

© BT Prime-Mover Inc.

3530-000

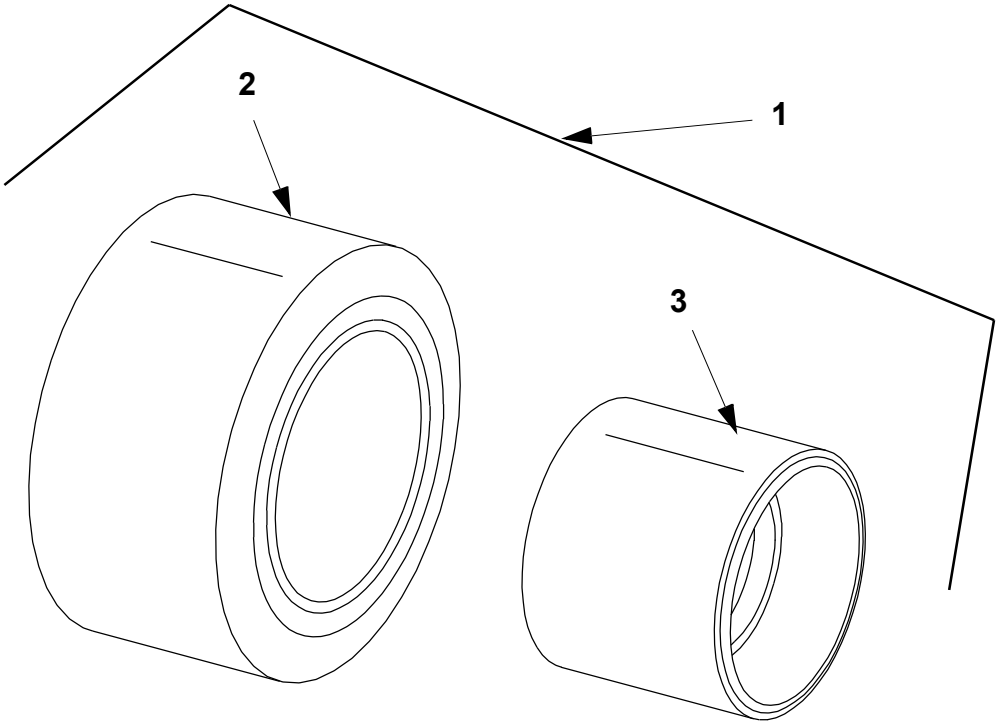

© BT Prime-Mover, Inc.

Return

3530-000 Drive wheel

ITEM #	PART #	NAME	# FOR ASSY.	UNITS
1	302258-000	Wheel, **Rubber** drive	1	Rubber
1	302258-002	Wheel, **Non-marking XLC** drive	1	Non-marking
1	302258-003	Wheel, **Traction-lug** drive	1	Traction-lug
1	302258-004	Wheel, **Grip Rubber Shell** drive	1	Grip Rubber
1	302258-006	Wheel, **Crowned Urethane**	1	Crowned Poly
2	20071-01	Tire, **Rubber**	1	Rubber
2	20071-03	Tire, **Non-marking XLC** drive	1	Non-marking
2	20071-04	Tire, **Traction-lug** drive	1	Traction-lug
2	20071-05	Tire, **Grip Rubber Shell** drive	1	Grip Rubber
2	303624-000	Tire, **Crowned Urethane**	1	Crowned Poly
3	302247-000	Wheel, drive	1	

© BT Prime-Mover, Inc.

3540-000

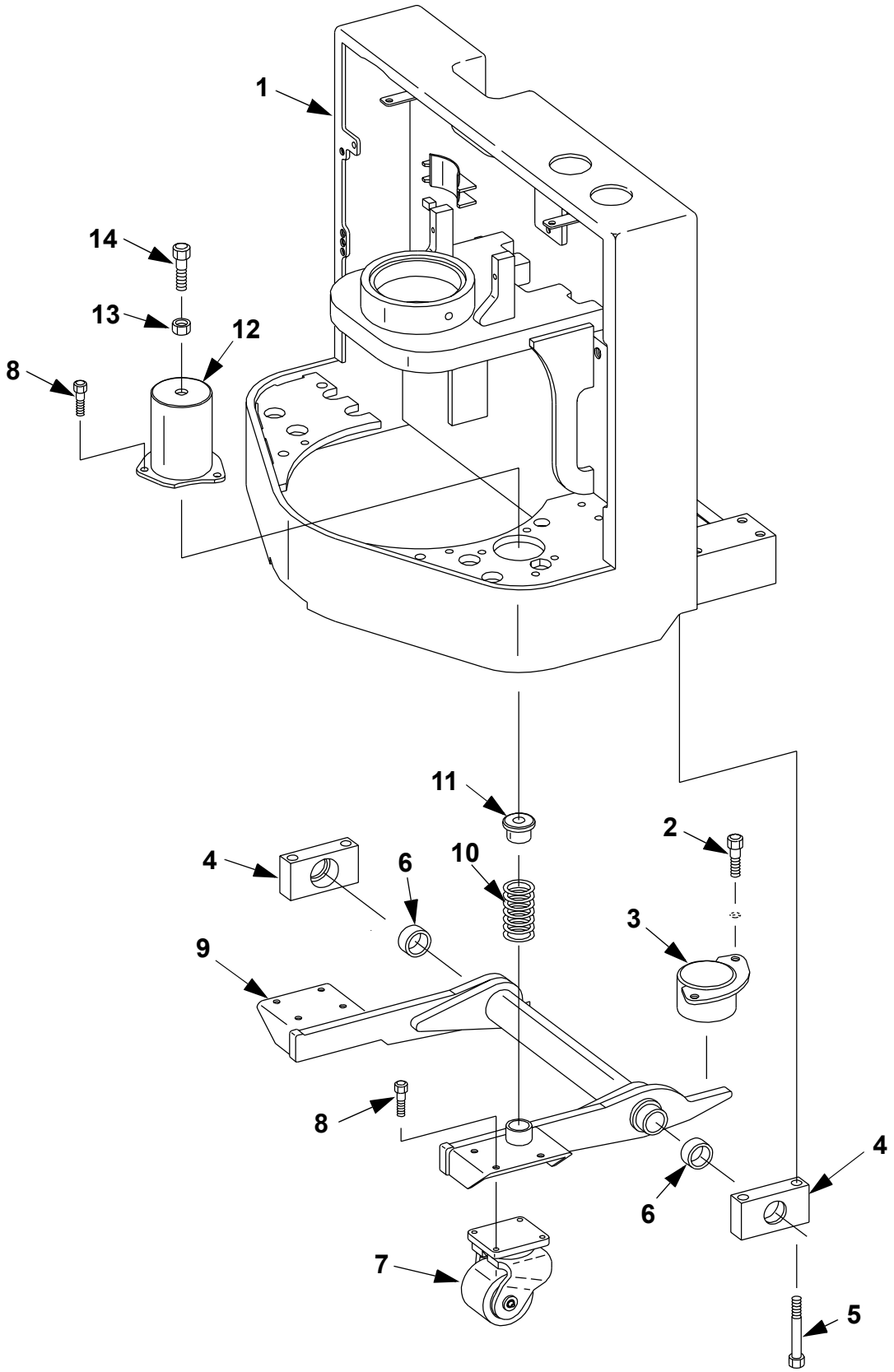

© BT Prime-Mover, Inc.

3540-000 Support / swivel wheel

ITEM #	PART #	NAME	# FOR ASSY.	UNITS
1	----------	Frame, carrier **(State Model & Serial Number)**	1	
2	301652-025	Screw, cap	2	
3	----------	Compensator cylinder assembly (See Fig.# 6120-001)	1	
4	301748-000	Pivot	2	
5	20616	Screw, cap	2	
6	11020-41	Bushing	4	
7	----------	Caster assembly (See Fig.# 3560-000)	2	
8	301955-030	Screw, Cap	11	
9	304315-001	Bar, torsion	1	
10	305786-000	Spring	1	
11	301788-000	Retainer, spring	1	
12	304316-001	Base, spring	1	
13	301960-020	Nut	1	
14	301958-110	Screw, cap	1	

© BT Prime-Mover, Inc.

3550-000

Inside of Truck

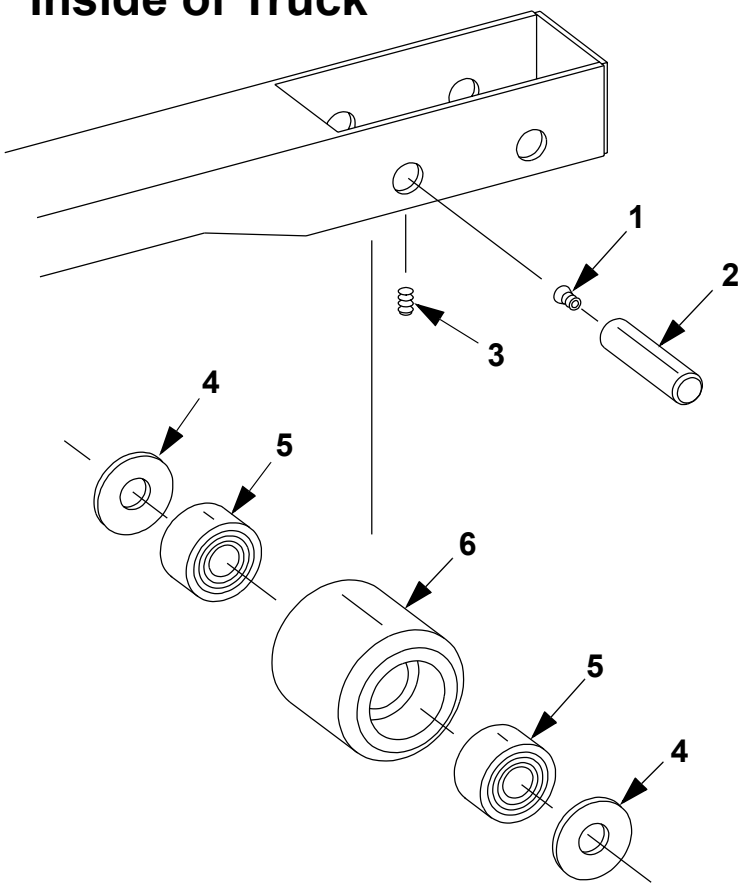

© BT Prime-Mover, Inc.

Return

3550-000 Load wheels

ITEM #	PART #	NAME	# FOR ASSY.	UNITS
1	11160-09	Fitting, grease	4	
2	304619-000	Axle, **Standard**	4	
2	304619-001	Axle, **Corrosion & Freezer package**	4	**Corrosion**
3	301740-001	Screw, set	4	
4	11857-20	Washer, trust	8	
5	49910-02	Bearing	8	
6	42136-00	Wheel, load	4	

© BT Prime-Mover, Inc.

3560-000

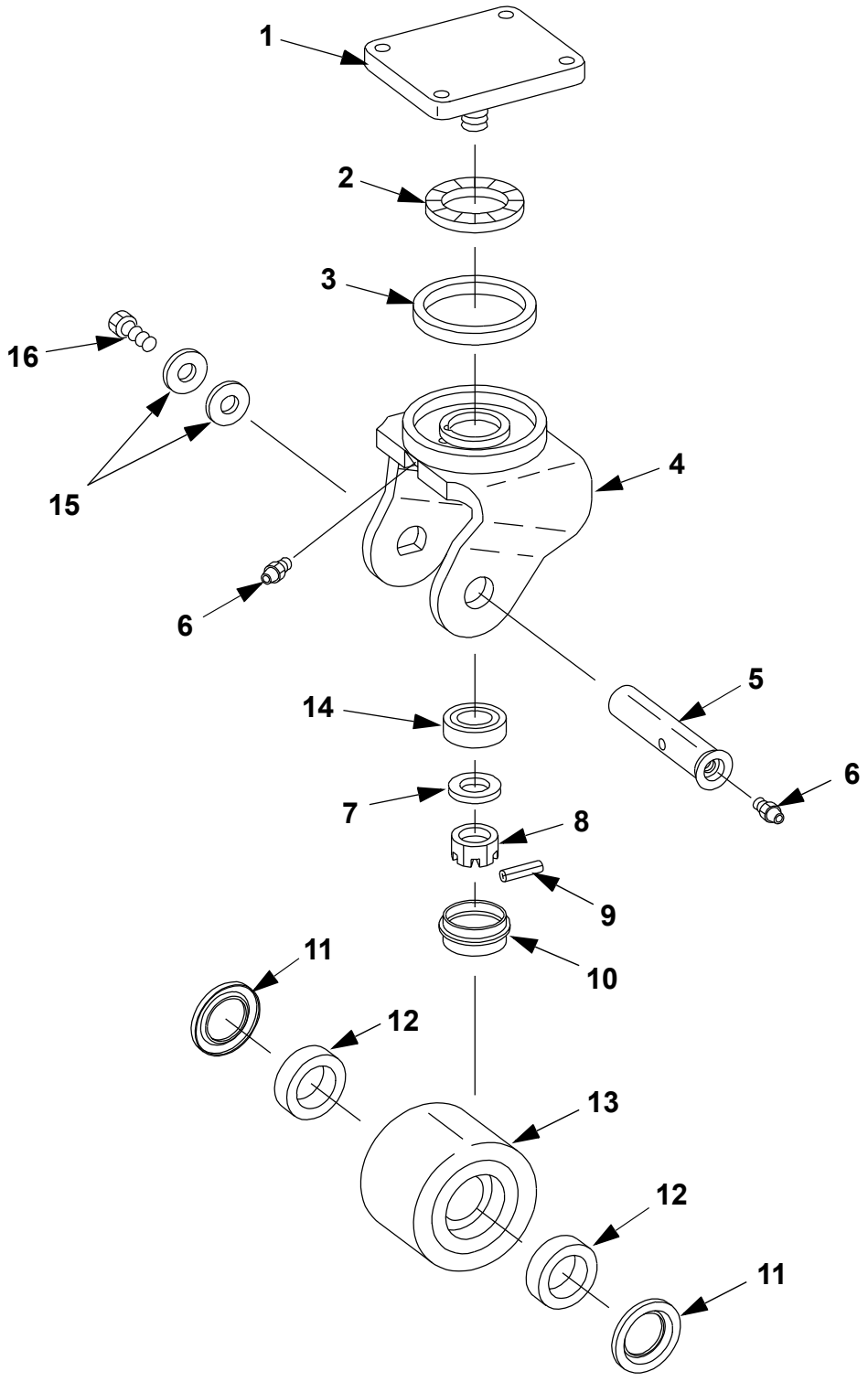

© BT Prime-Mover, Inc.

Return

3560-000 Caster assembly

ITEM #	PART #	NAME	# FOR ASSY.	UNITS
*	304583-000	Caster assembly	1	
1	27796-02	Base, plate	1	
2	304349-000	Bearing, thrust	1	
3	27810-00	Seal, felt	1	
4	302058-000	Yoke, caster	1	
5	301297-000	Axle, caster	1	
6	11160-11	Fitting, grease	2	
7	11936-17	Washer	1	
8	304348-000	Nut, slotted	1	
9	11073-34	Pin, roll	1	
10	27809-00	Cap, hub	1	
11	301298-000	Washer, spacer	2	
12	49910-01	Bearing, ball	2	
13	27808-00	Wheel	1	
14	11205-29	Bearing, roller	1	
15	14935-01	Washer, spacer	2	
16	11017-04	Screw, cap	1	

© BT Prime-Mover, Inc.

This page intentionally left blank

© BT Prime-Mover Inc.

Return

4000
Steering System

© BT Prime-Mover Inc.

Return

4110-001

Serial Number
27324000 - UP

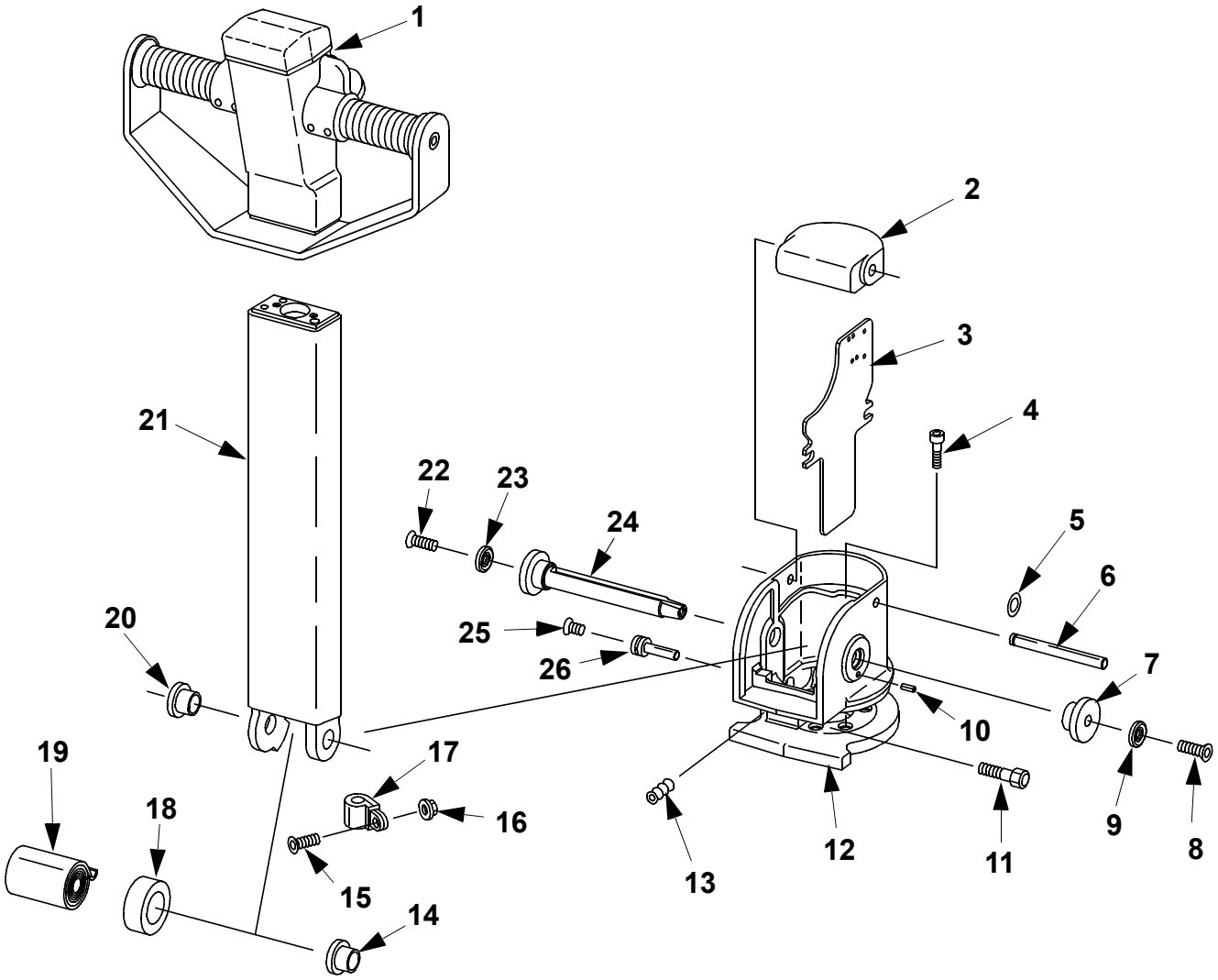

© BT Prime-Mover Inc.

4110-001 Steering arm / wheel (Tiler arm) Serial Number 27324000 - UP

ITEM #	PART #	NAME	# FOR ASSY.	UNITS
1	----------	Head assembly (See Fig.# 4111-000)	1	
2	302290-000	Bumper	1	
3	301764-000	Baffle	1	
4	301954-025	Screw, socket head	6	
5	13281-02	E clip	1	
6	301762-000	Pin	1	
7K	NSS	Cap	1	
8K	301922-025	Screw, flat head socket	1	
9K	302096-008	Washer	1	
10	302572-000	Pin, groove	1	
11	301652-016	Screw, socket head	1	
12	301753-000	Pivet, handle	1	
13	301740-001	Screw, set	1	
14	11695-12	Bushing, flanged	1	
15	301922-020	Screw	1	
16	14851-04	Nut, clip	1	
17	15677-10	Clamp	1	
18	304855-000	Spacer	1	
19	301765-000	Spring	1	
20	11695-12	Bearing, flanged	1	
21	301766-000	Stem, handle	1	
22K	301922-025	Screw, flat head socket	1	
23K	302096-008	Washer	1	
24K	NSS	Pin, handle pivot	1	
25	11160-11	Fitting, grease **(Cold storage)**	1	**(Cold storage)**
26	301885-000	Pin, brake pivot	1	
26	305564-000	Pin, brake pivot **(Cold storage)**	1	**(Cold storage)**
K	308439-000	Kit, pin (Contains Items Marked With “K”)	1	

© BT Prime-Mover Inc.

4111-000

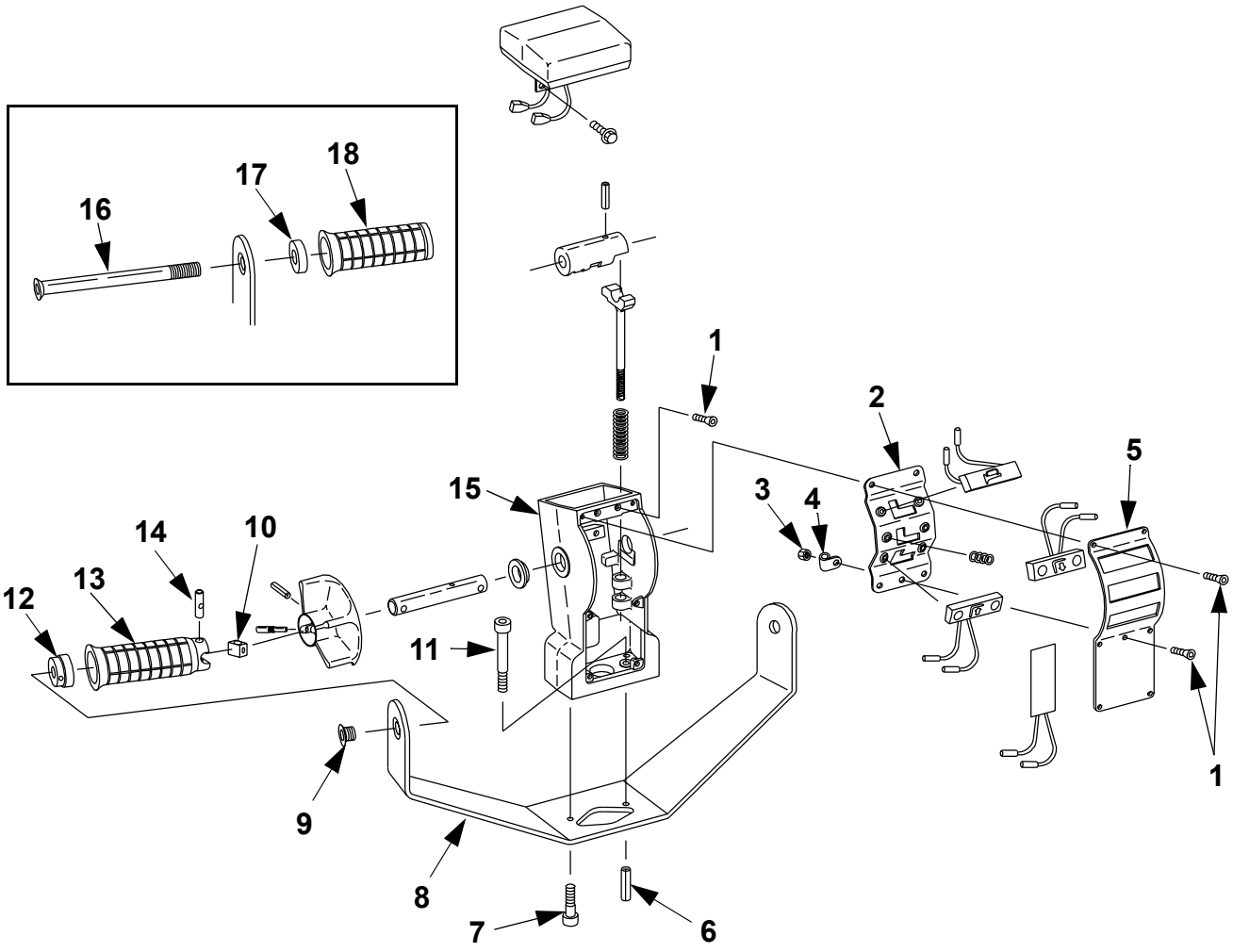

© BT Prime-Mover Inc.

Return

4111-000 Steering arm / wheel (Head)

ITEM #	PART #	NAME	# FOR ASSY.	UNITS
1	301921-012	Screw, flat head	9	
2	301724-000	Bracket, switch	1	
3	301960-004	Nut	1	
4	302080-000	Clamp, cable	1	
5	301723-000	Cover	1	
6	301965-026	Pin, roll	1	
7	301961-010	Screw, shoulder	1	
8	301721-000	Guard	1	
9	301922-020	Screw, flat head locking	2	**Twist**
10	301781-000	Block	2	**Twist**
11	301954-035	Screw, socket	2	
12	301777-000	Bushing	2	**Twist**
13	301719-000	Grip, twist	2	**Twist**
14	301778-000	Pin	2	**Twist**
15	301717-000	Housing, switch	1	
16	301922-100	Screw, flat head	2	**Thumb**
17	301776-000	Washer	2	**Thumb**
18	301720-000	Grip, fixed	2	**Thumb**

© BT Prime-Mover Inc.

4180-000

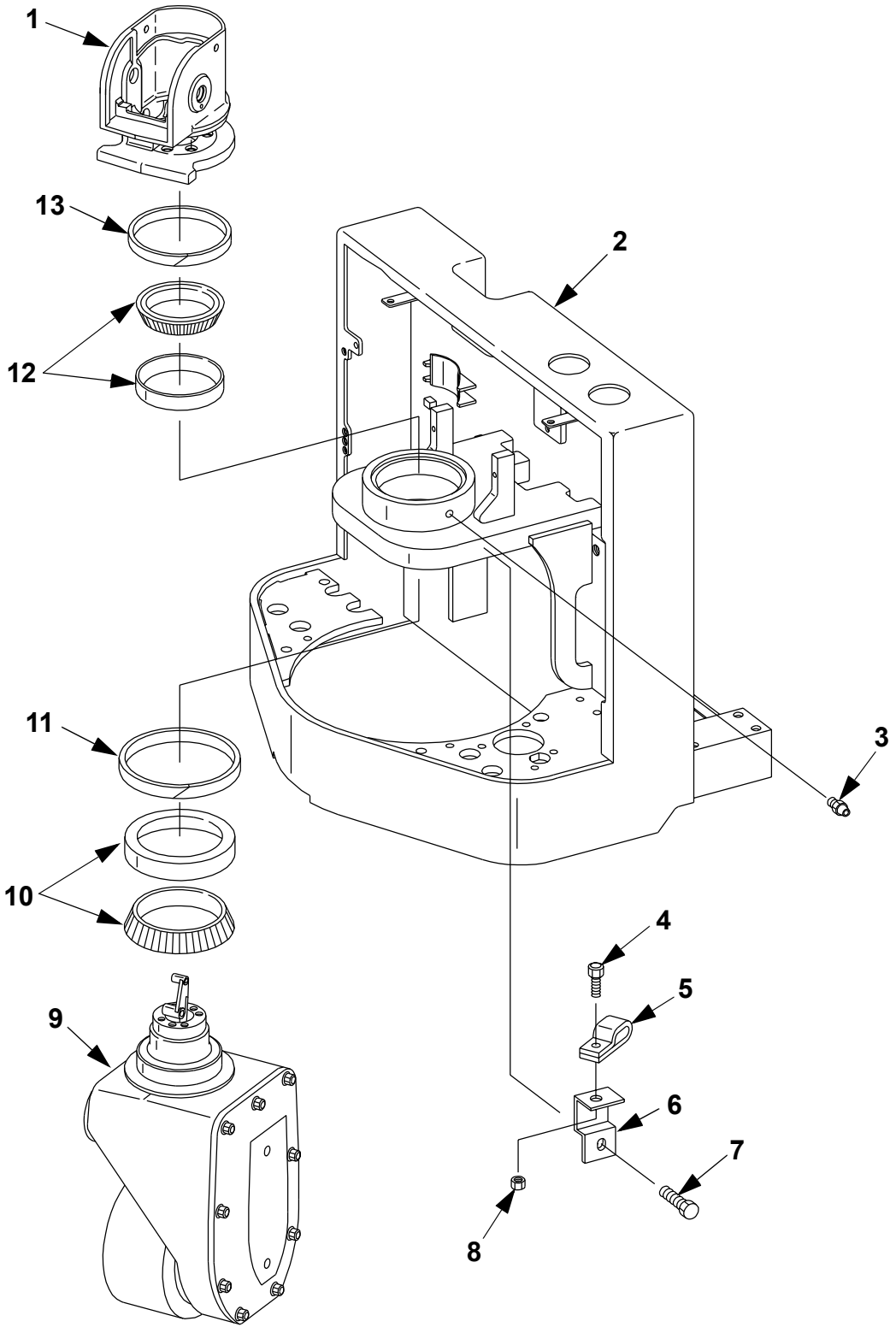

© BT Prime-Mover, Inc.

Return

4180-000 Steering / radial bearing

ITEM #	PART #	NAME	# FOR ASSY.	UNITS
1	----------	Pivot, handle (See Fig.# 4110-001)	1	
2	----------	Frame, carrier **(State Model & Serial Number)**	1	
3	11160-14	Fitting, 90° grease	1	
4	301652-016	Screw, socket head	1	
5	49709-10	Clamp	1	
6	302061-000	Bracket, harness	1	
7	301955-016	Screw, socket head	1	
8	301960-008	Nut	1	
9	----------	Transmission assembly (See Fig.# 2550-000)	1	
10	11205-26	Bearing	1	
11	301946-000	Seal, large felt	1	
12	11205-30	Bearing	1	
13	301946-001	Seal, small felt	1	

© BT Prime-Mover, Inc.

This page intentionally left blank

© BT Prime-Mover Inc.

Return

5000
Electrical System

© BT Prime-Mover Inc.

Return

5161-000

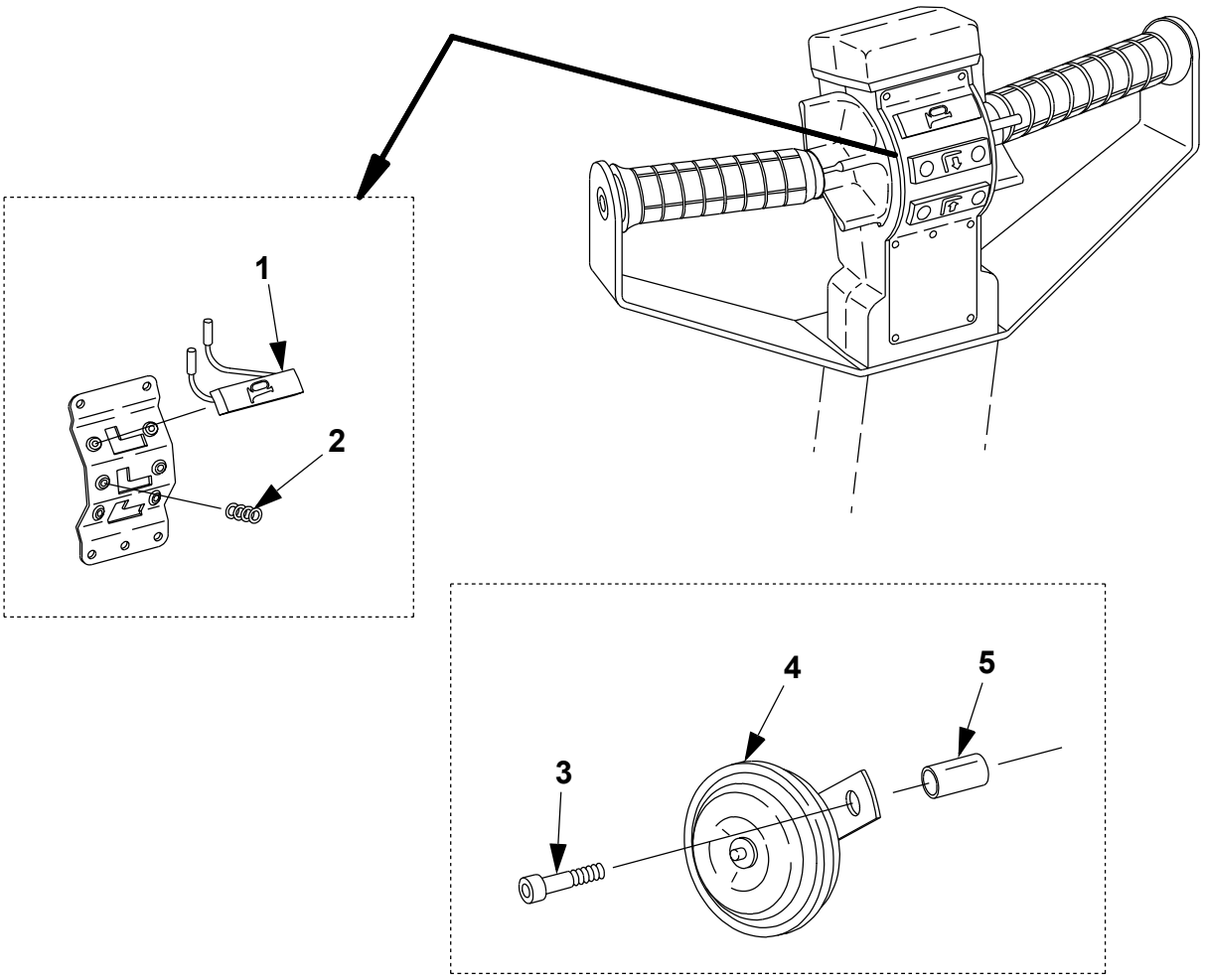

© BT Prime-Mover, Inc.

Return

5161-000 Horn

ITEM #	PART #	NAME	# FOR ASSY.	UNITS
1	302129-000	Switch, horn	1	
2	301917-000	Spring, return	2	
3	27205	Screw, socket head	1	
4	23309-01	Horn	1	
5	11020-46	Bushing	1	

© BT Prime-Mover, Inc.

5180-000

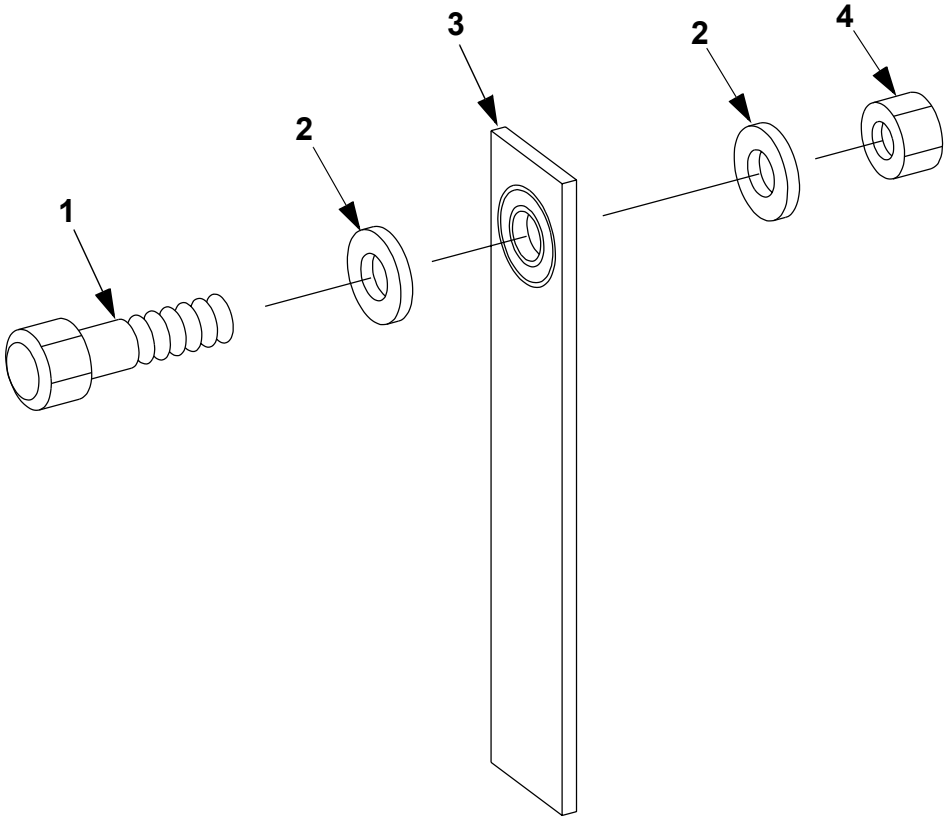

© BT Prime-Mover, Inc.

Return

5180-000 Static strap

ITEM #	PART #	NAME	# FOR ASSY.	UNITS
1	50004-03	Screw, cap	1	
2	20348	Washer, flat	2	
3	307567-000	Strap, static (cut to length)	1	
4	301960-010	Nut	1	

© BT Prime-Mover, Inc.

5190-000

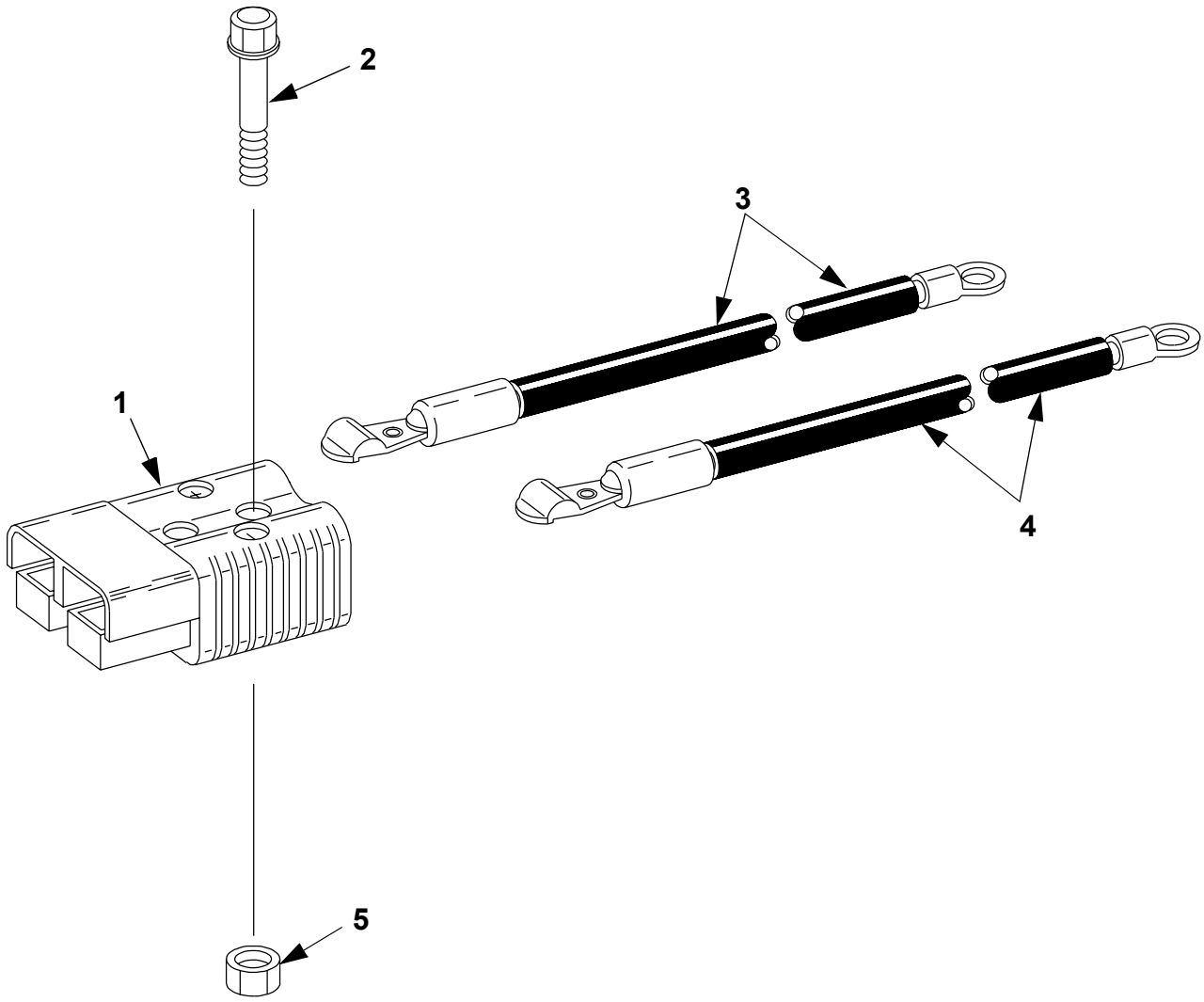

© BT Prime-Mover, Inc.

Return

5190-000 Battery connector

ITEM #	PART #	NAME	# FOR ASSY.	UNITS
1	49854-01	Connector, SB-175 **GRAY** housing	1	**GRAY**
1	49854-03	Connector, SB-175 **YELLOW** housing	1	**YELLOW**
1	49854-04	Connector, SB-175 **RED** housing	1	**RED**
1	49854-08	Connector, SB-175 **BLUE** housing	1	**BLUE**
2	301952-040	Screw, cap	2	
3	----------	Cable, **NEGATIVE** (See Fig.# 5430-000)	1	
4	----------	Cable, **POSITIVE** (See Fig.# 5430-000)	1	
5	301960-006	Nut	2	

© BT Prime-Mover, Inc.

5191-000

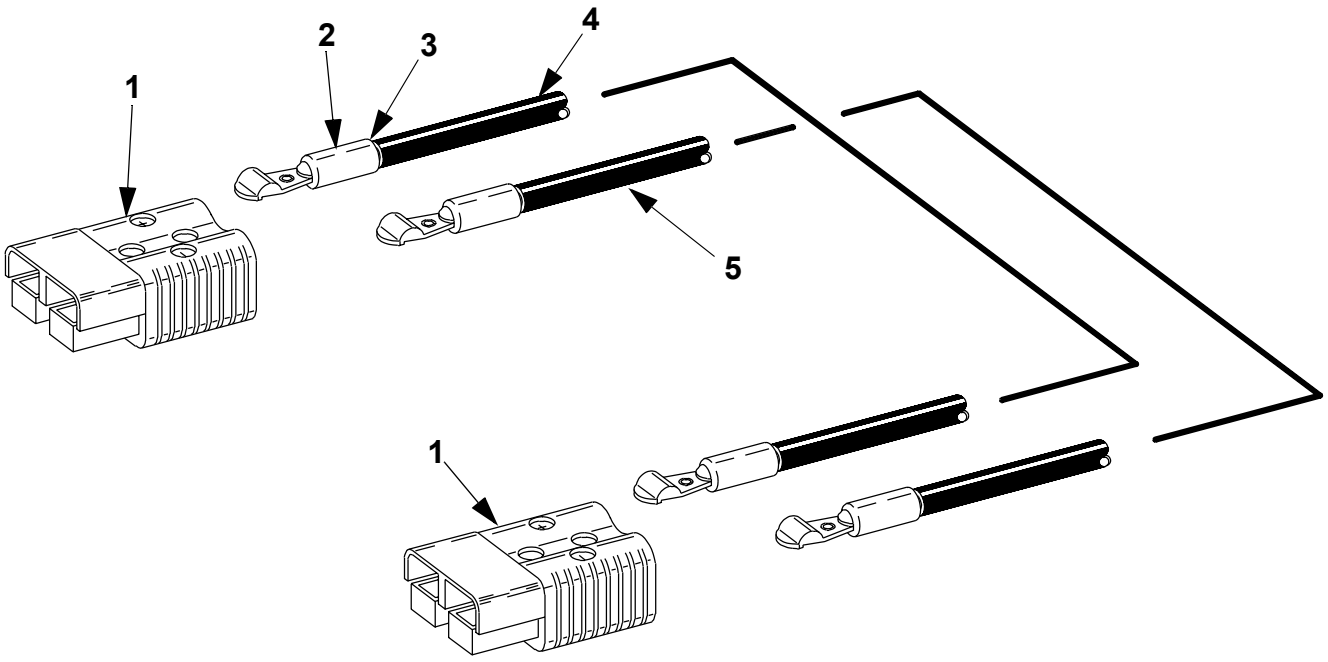

© BT Prime-Mover, Inc.

Return

5191-000 Battery pack connector

ITEM #	PART #	NAME	# FOR ASSY.	UNITS
1	49854-01	Connector, SB-175 **GRAY** housing	1	**GRAY**
1	49854-03	Connector, SB-175 **YELLOW** housing	1	**YELLOW**
1	49854-04	Connector, SB-175 **RED** housing	1	**RED**
1	49854-08	Connector, SB-175 **BLUE** housing	1	**BLUE**
2	49852-01	Connector, tip	4	
3	49853-02	Bushing	4	
4	49856-148	Cable, **Negative**	1	
5	49856-148	Cable, **Positive**	1	

© BT Prime-Mover, Inc.

5192-000

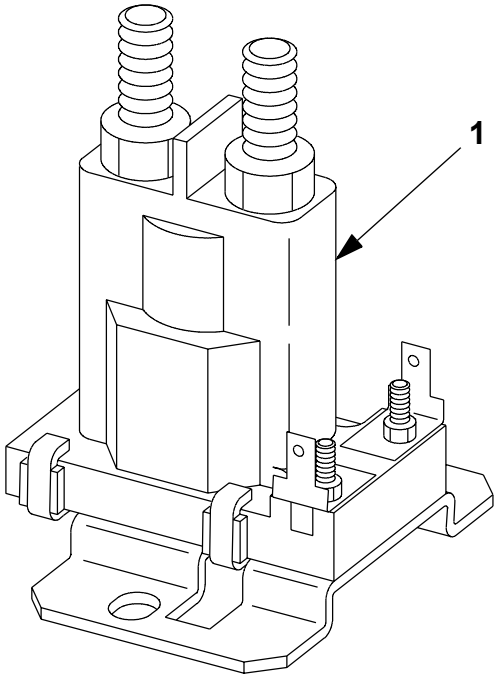

© BT Prime-Mover, Inc.

Return

5192-000 200 Amp system line contactor

ITEM #	PART #	NAME	# FOR ASSY.	UNITS
1	23452-01	Contactor, line	1	
*	301951-010	Screw, cap	2	

© BT Prime-Mover, Inc.

5192-100

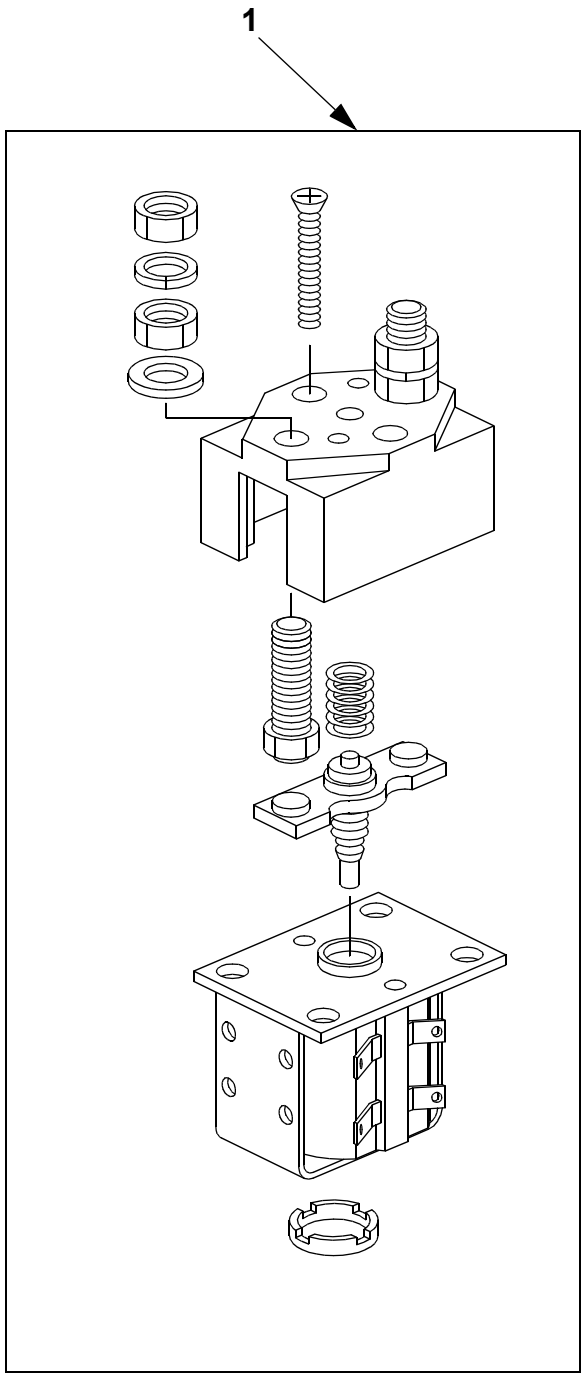

© BT Prime-Mover, Inc.

Return

5192-100 300 Amp system line contactor

ITEM #	PART #	NAME	# FOR ASSY.	UNITS
1	304297-000	Contactor, **300 Amp** line **"E"**	1	"E"
*	301951-010	Screw, cap	2	

© BT Prime-Mover, Inc.

5230-000

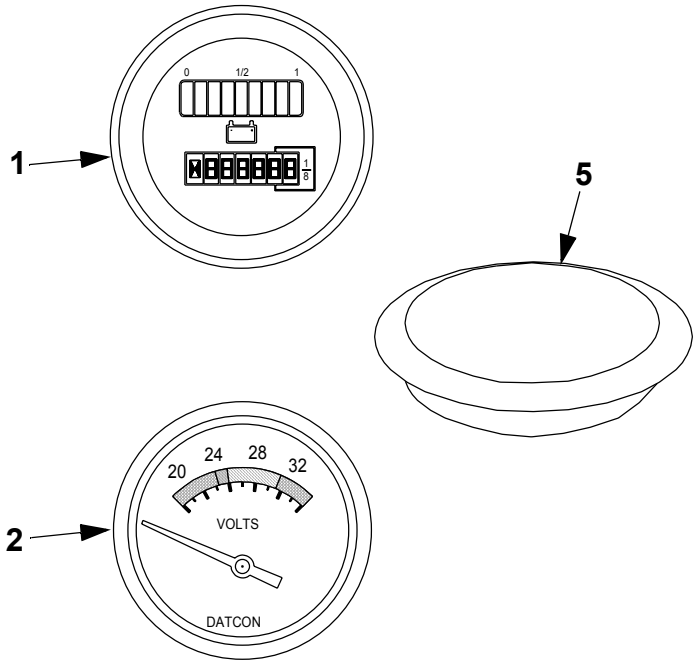

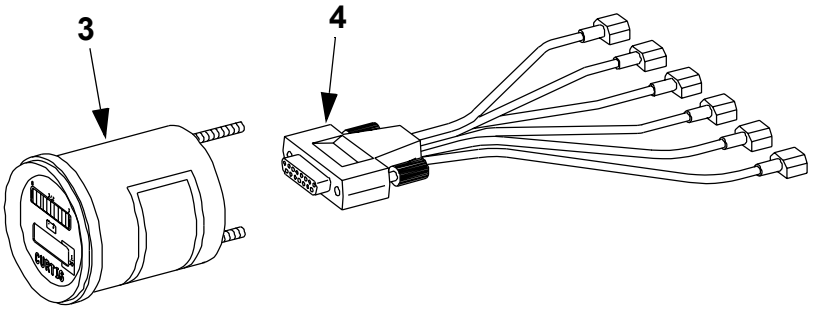

© BT Prime-Mover, Inc.

5230-000 Voltage / battery indicator

ITEM #	PART #	NAME	# FOR ASSY.	UNITS
1	301445-001	Battery discharge indicator/hourmeter	1	
2	305282-001	Battery discharge indicator, **BDI**	1	
3	306051-001	Display, BDI/Hourmeter lift interrupt	1	
4	306052-000	Harness, wire	1	
5	14915-01	Plug, hole	1	

© BT Prime-Mover, Inc.

5290-000

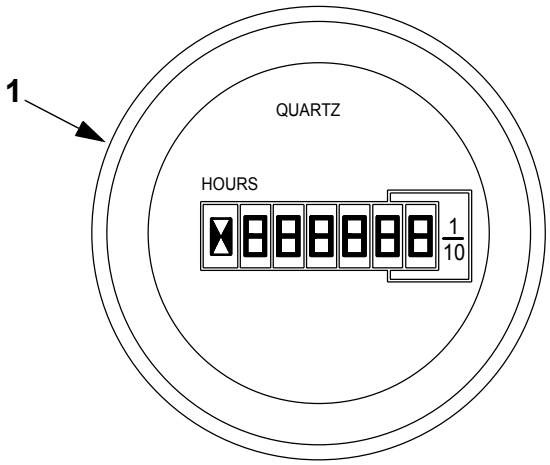

© BT Prime-Mover, Inc.

5290-000 Hourmeter / speedometer

ITEM #	PART #	NAME	# FOR ASSY.	UNITS
1	302201-000	Hourmeter	1	

© BT Prime-Mover, Inc.

5310-000

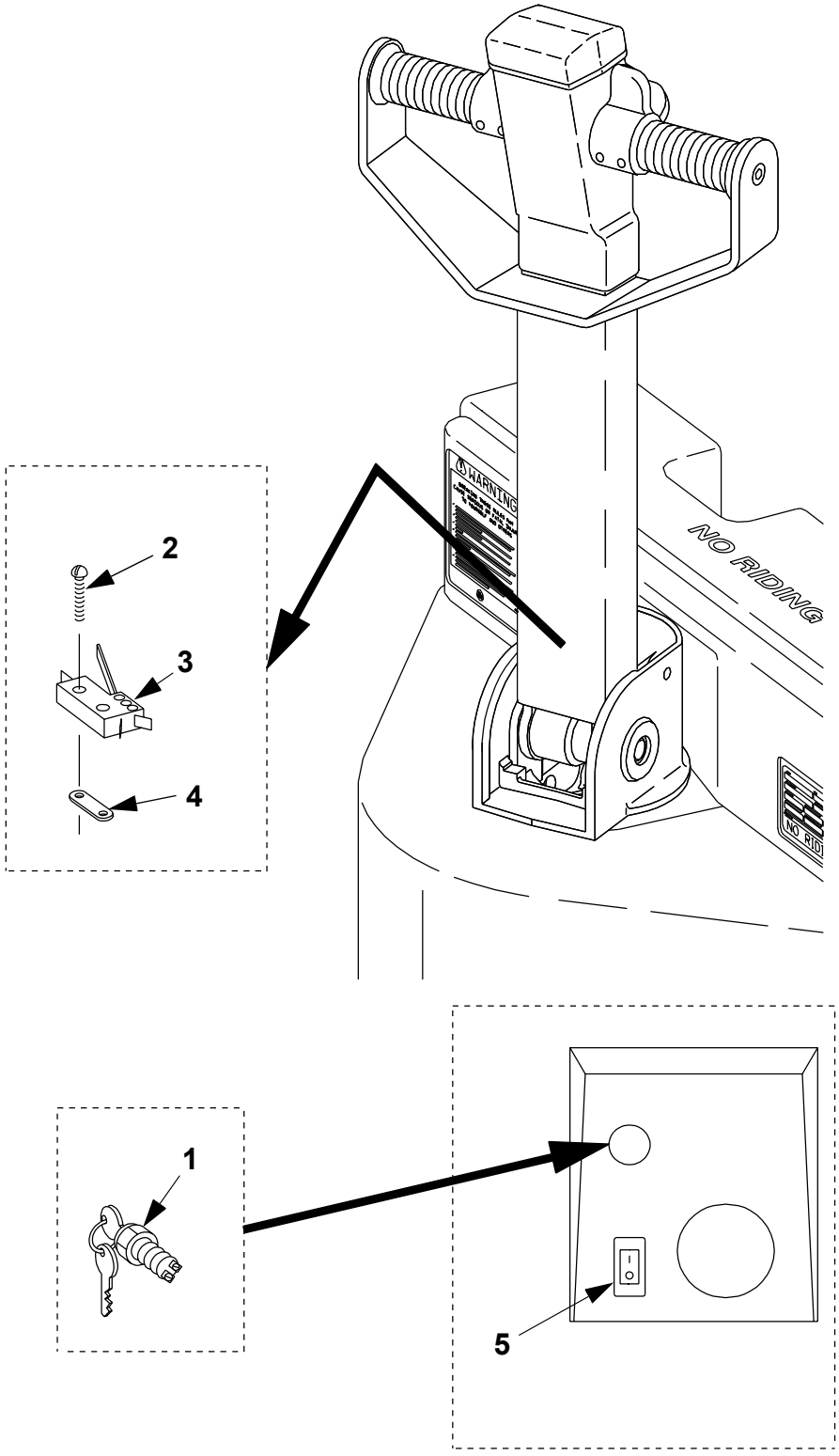

© BT Prime-Mover, Inc.

5310-000 Start / stop switch

ITEM #	PART #	NAME	# FOR ASSY.	UNITS
1	302016-000	Switch, key	1	
*	302092-000	Keys, set of 2	1	
1	304267-000	Switch, toggle	1	
2	11880-09	Screw, round	2	
3	20208-00	Switch, brake interlock	1	
3	20323-00	Switch, brake interlock **(Sealed)**	1	Sealed
*	49771-02	Fitting, male tab wire	2	
4	14986-03	Nut, twin	1	
5	305493-000	Switch, disconnect	1	

© BT Prime-Mover, Inc.

5330-000

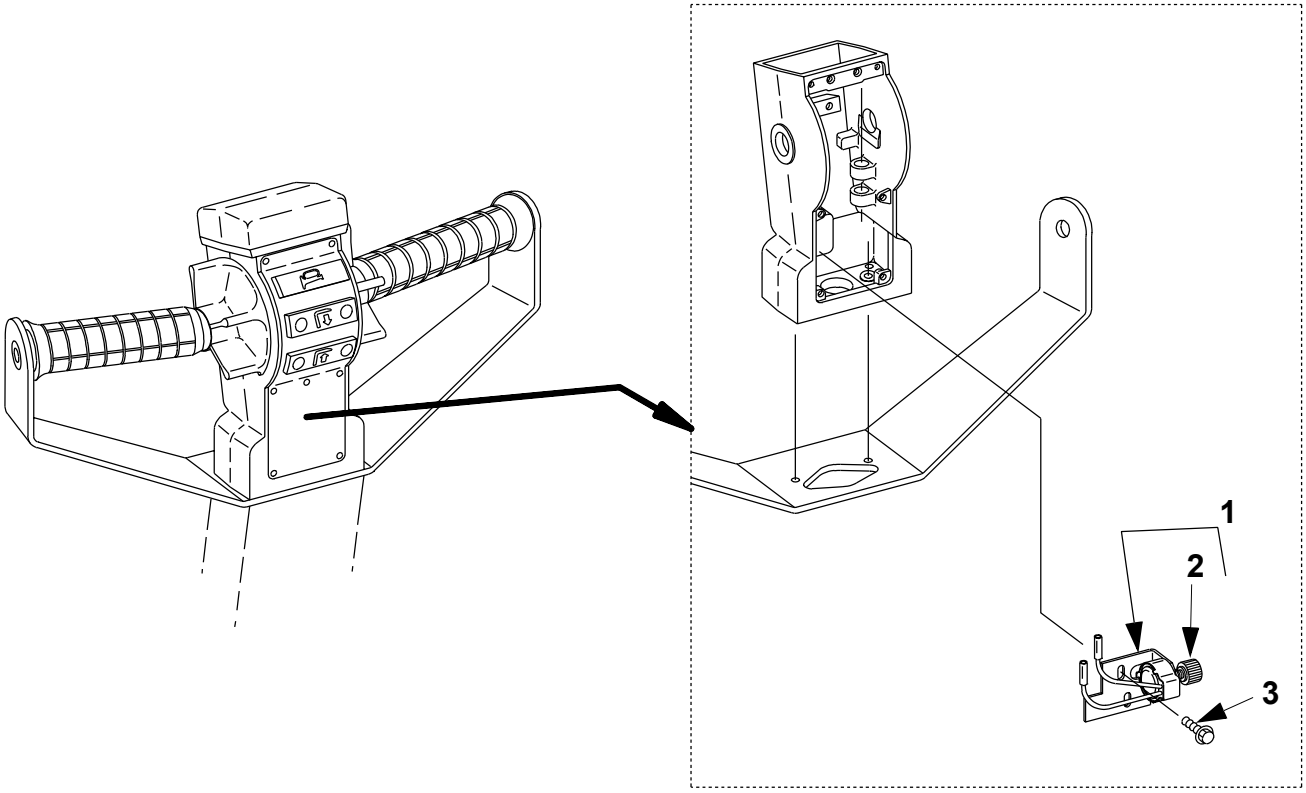

© BT Prime-Mover, Inc.

5330-000 Speed controls

ITEM #	PART #	NAME	# FOR ASSY.	UNITS
1	307644-000	Potentiometer bracket assembly	1	
2	119697	Gear	1	
3	301825-010	Screw	2	

© BT Prime-Mover, Inc.

5390-001

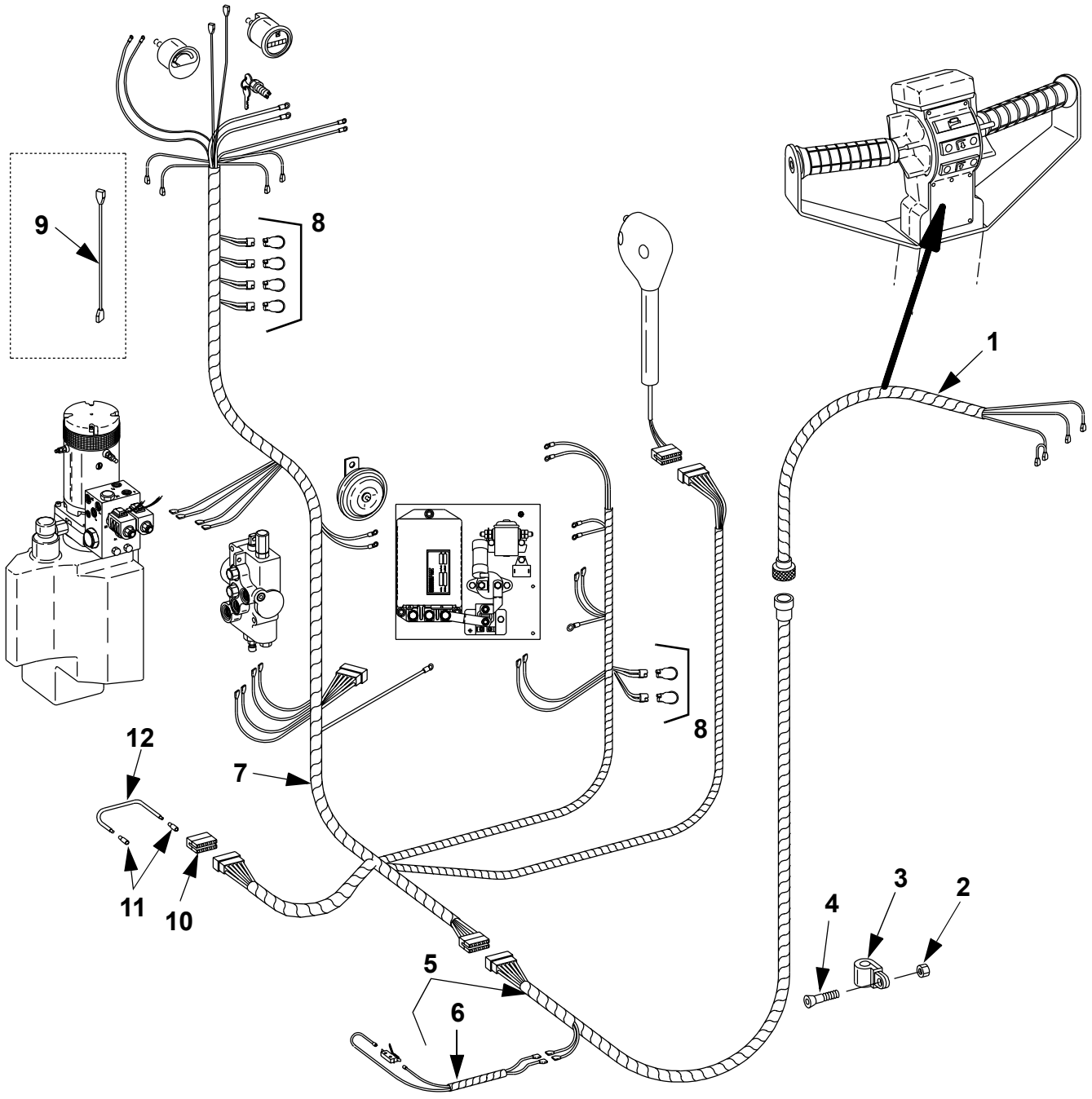

© BT Prime-Mover Inc.

5390-001 Control cables / harnesses

ITEM #	PART #	NAME	# FOR ASSY.	UNITS
1	302023-000	Harness, head	1	
2	14851-04	Nut, clip	1	
3	15677-10	Clamp	1	
4	301922-020	Screw, flat head	1	
5	307193-000	Harness, handle stem	1	
6	307566-000	Harness (supplied with item number 5)	1	
7	307589-000	Harness, main	1	
8	49607-00	Diode	6	
9	20163-102	Jumper	2	
10	306215-001	Connector, plug	1	
11	306216-001	Receptacle, socket	5	
12	52-07933-00	Wire, 4 in. [101 mm]	As Req'd.	

© BT Prime-Mover Inc.

5430-000

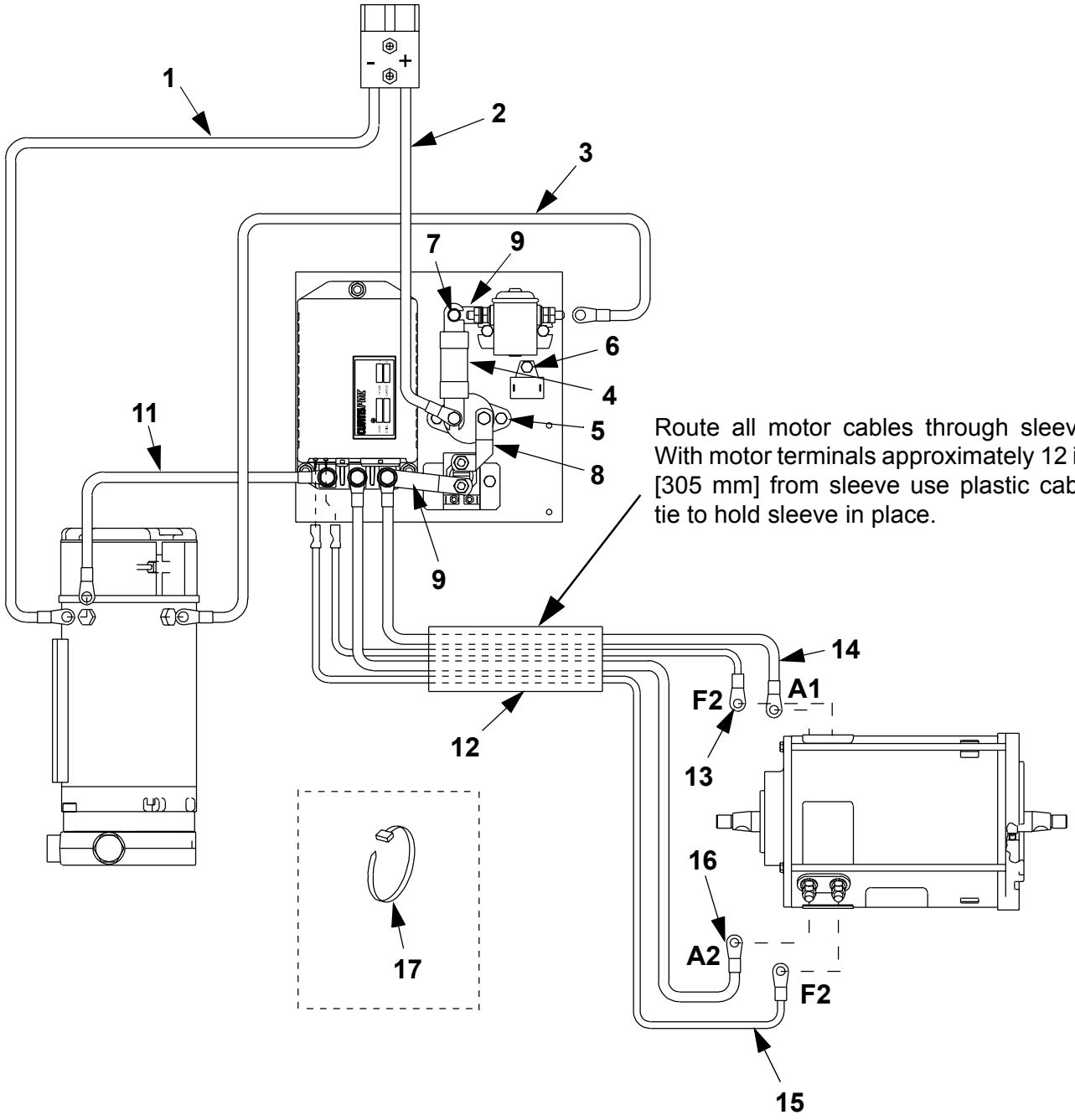

© BT Prime-Mover Inc.

Return

5430-000 Motor power cables

ITEM #	PART #	NAME	# FOR ASSY.	UNITS
1	305976-001	Cable	1	
2	305976-000	Cable	1	
3	305975-000	Cable	1	
4	25094-04	Fuse, **300 AMP**	1	**300 AMP**
5	----------	Power breaker **(105 AMP)** (See Fig.# 5911-000)	1	**105 AMP**
5	301951-016	Screw, cap	2	
6	----------	Control breaker (See Fig.# 5910-000)	1	
6	301951-010	Screw, cap	1	
7	301951-010	Screw, cap	1	
7	301960-006	Nut	1	
7	302792-000	Washer, brass flat	1	
8	305967-000	Bar, bus	1	**“EE”**
8	305974-004	Cable **“EE”**	1	
9	305968-000	Bar, bus	1	**“EE”**
9	305969-000	Bar, bus **“EE”**	1	
10	305966-000	Bar, bus	1	
11	305975-001	Cable	1	
12	52-05103-00	Sleeve, **12 in. [305 mm]**	As Req’d.	
13	305974-003	Cable	1	
14	305974-000	Cable	1	
15	305974-002	Cable	1	
16	305974-001	Cable	1	
17	25332-01	Tie, wire	2	

© BT Prime-Mover Inc.

5460-000

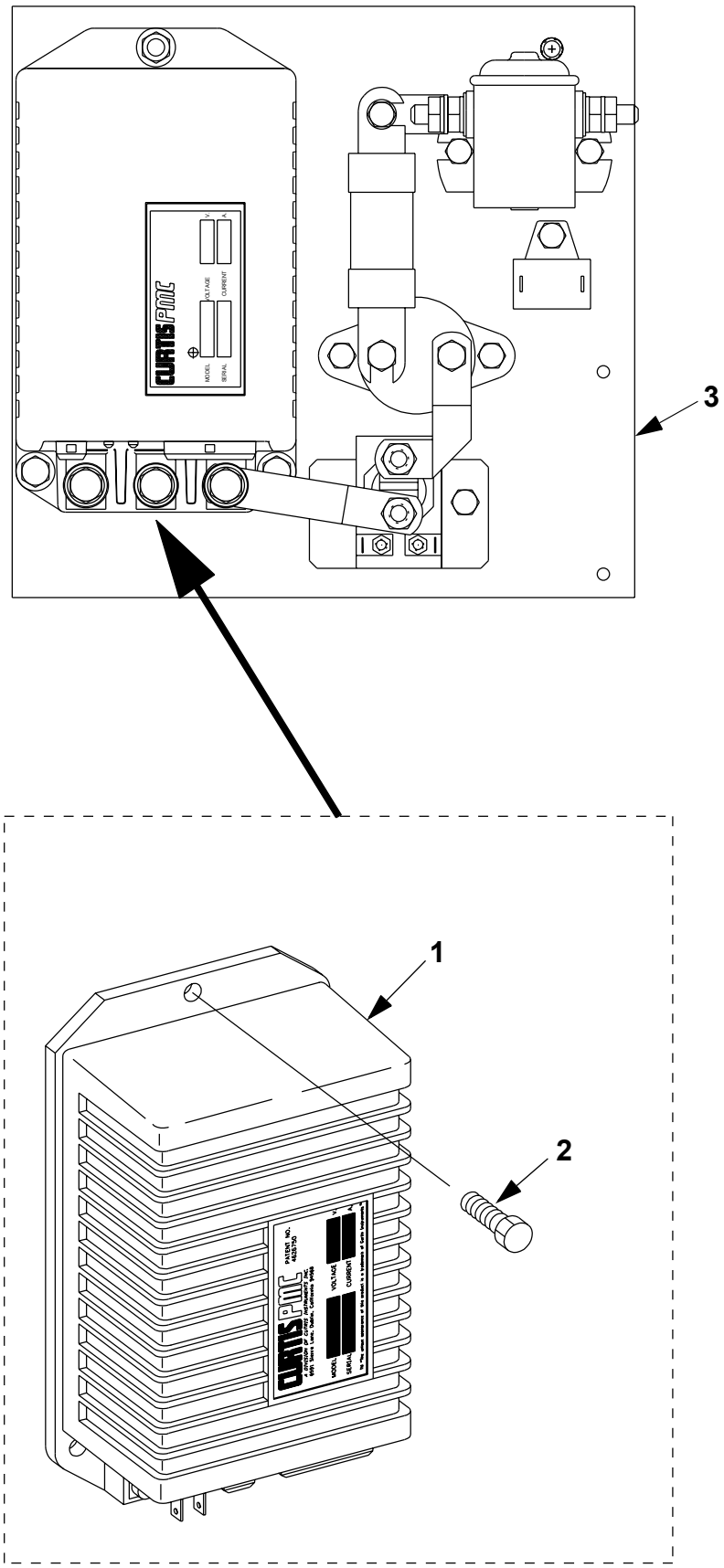

© BT Prime-Mover, Inc.

5460-000 Transistor panel

ITEM #	PART #	NAME	# FOR ASSY.	UNITS
1	305878-000	Controller, **200 AMP** system	1	**200 AMP**
2	301951-010	Screw, cap	2	
3	306345-000	Panel	1	

© BT Prime-Mover, Inc.

5510-000

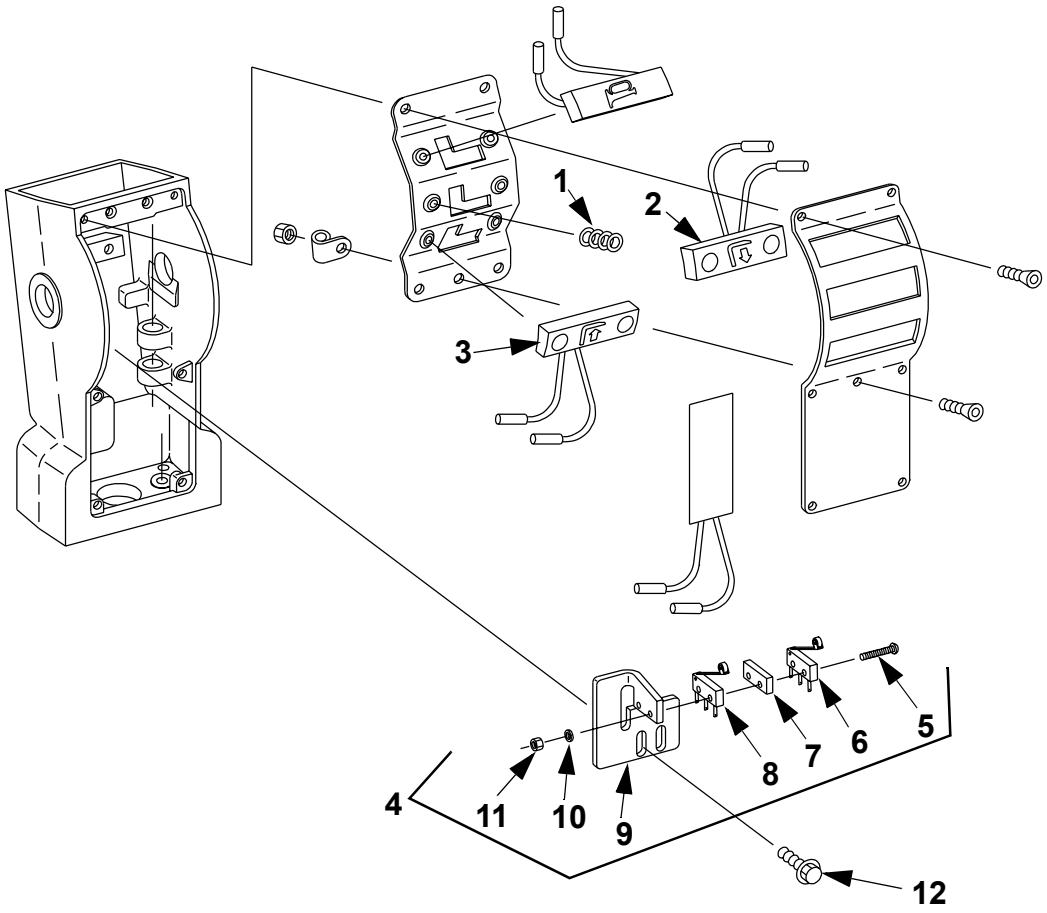

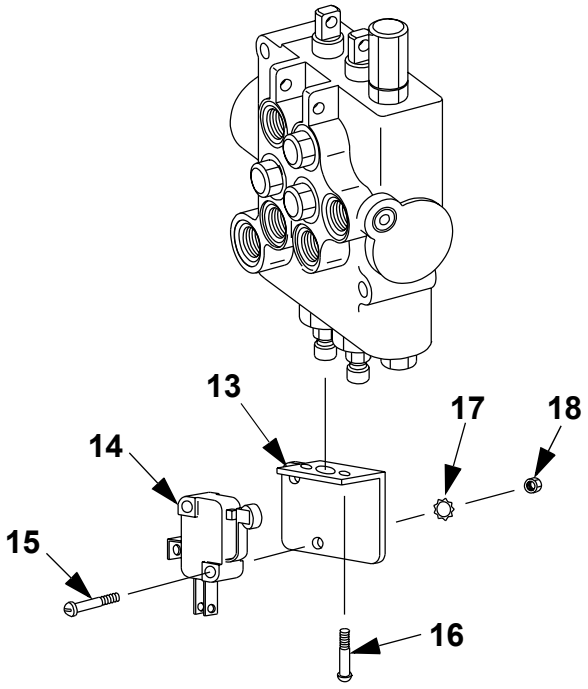

© BT Prime-Mover, Inc.

5510-000 Micro switches

ITEM #	PART #	NAME	# FOR ASSY.	UNITS
1	301917-000	Spring, return	4	
2	302130-000	Switch, **lift**	1	
3	302130-001	Switch, **lower**	1	
4	308518-000	Kit, forward and rearward switch	1	
5	NSS	Screw, machine	2	
6	NSS	Switch, **rearward**	1	
7	NSS	Spacer	1	
8	NSS	Switch, **forward**	1	
9	NSS	Bracket, forward and rearward	1	
10	NSS	Lockwasher	2	
11	NSS	Nut	2	
12	301825-010	Screw	2	
13	306064-000	Bracket, switch	As Req'd.	
14	306097-000	Switch	As Req'd.	
15	301950-016	Screw	As Req'd.	
16	11885-03	Screw	As Req'd.	
17	11072-14	Lockwasher	As Req'd.	
18	11261-11	Nut	As Req'd.	

© BT Prime-Mover, Inc.

5590-000

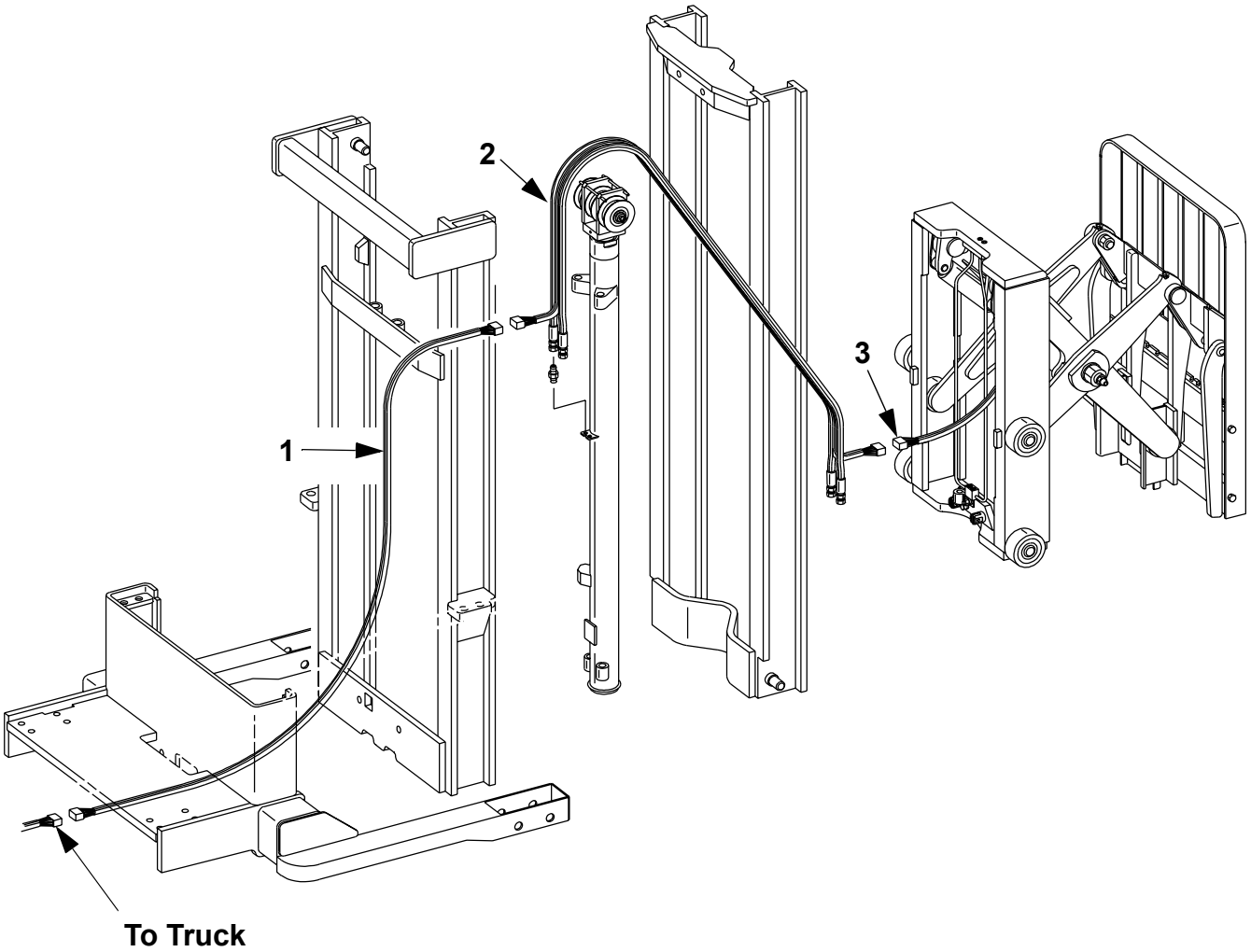

© BT Prime-Mover, Inc.

Return

5590-000 Control cables, harness (Two stage mast)

ITEM #	PART #	NAME	# FOR ASSY.	UNITS
1	306191-008	Harness, truck to mast	1	
2	307107-006	Harness, mast **71/100**	1	**71/100**
2	307107-007	Harness, mast **83/124**	1	**83/124**
2	307107-008	Harness, mast **95/150**	1	**87/150**
3	307111-000	Harness, carriage	1	

© BT Prime-Mover, Inc.

5590-100

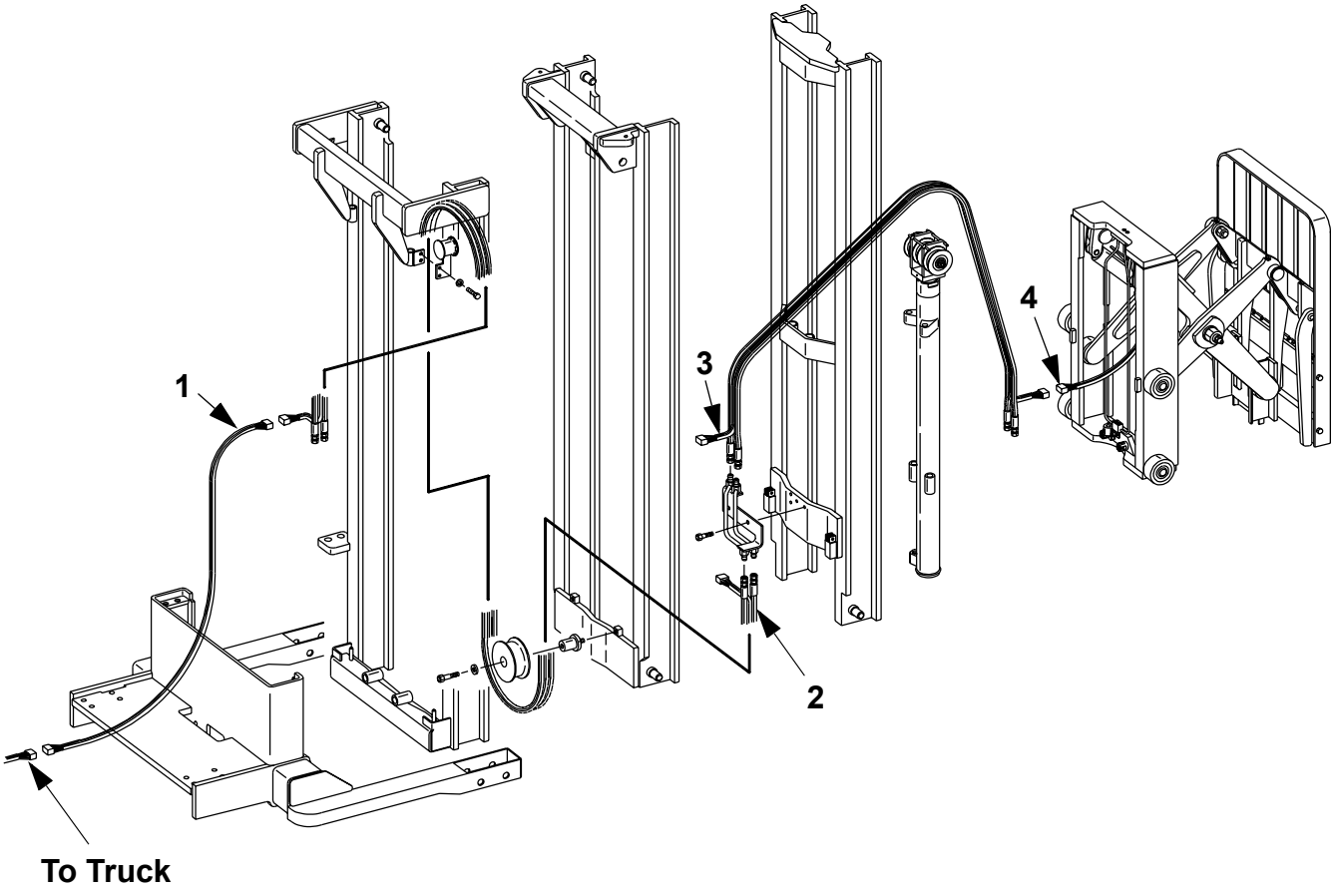

© BT Prime-Mover, Inc.

Return

5590-100 Control cables, harness (Three stage mast)

ITEM #	PART #	NAME	# FOR ASSY.	UNITS
1	306191-009	Harness, truck to mast	1	
2	307107-003	Harness, mast **71/150**	1	**71/150**
2	307107-004	Harness, mast **83/180**	1	**83/180**
2	307107-005	Harness, mast **87/189**	1	**87/189**
3	307107-000	Harness, mast **71/150**	1	**71/150**
3	307107-001	Harness, mast **83/180**	1	**83/180**
3	307107-002	Harness, mast **87/189**	1	**87/189**
4	307111-000	Harness, carriage	1	

© BT Prime-Mover, Inc.

5610-000

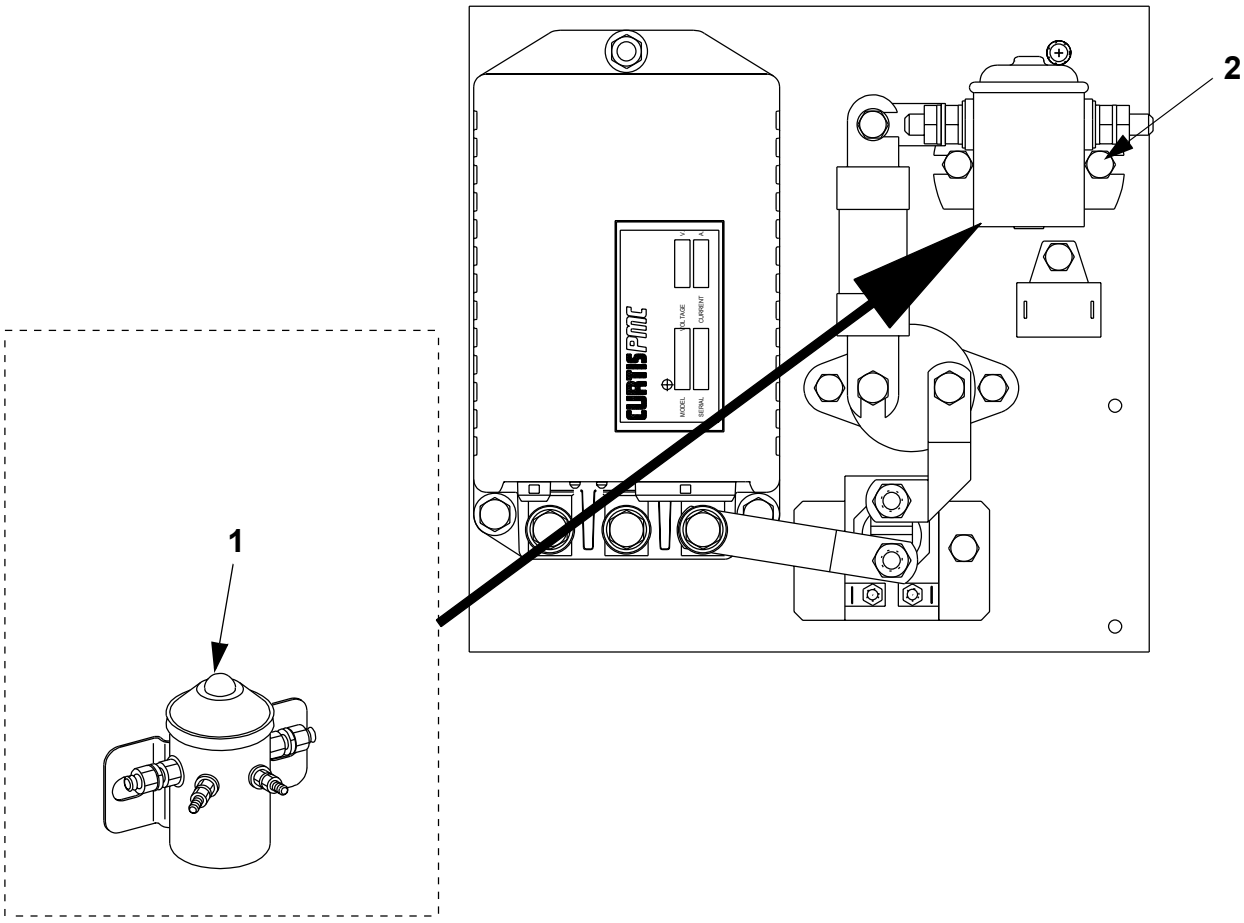

© BT Prime-Mover, Inc.

5610-000 Pump contactor

ITEM #	PART #	NAME	# FOR ASSY.	UNITS
1	22226-01	Solenoid, pump	1	
2	301951-010	Screw, cap	2	

© BT Prime-Mover, Inc.

5910-000

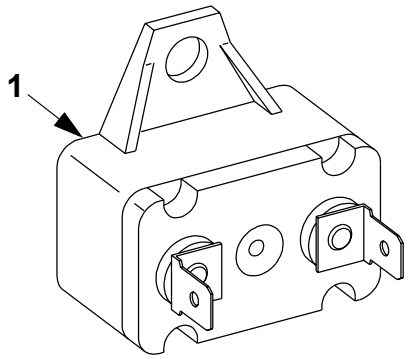

© BT Prime-Mover, Inc.

Return

5910-000 Control circuit breaker

ITEM #	PART #	NAME	# FOR ASSY.	UNITS
1	301889-000	Breaker, **12 AMP**	1	**12 AMP**

© BT Prime-Mover, Inc.

5911-000

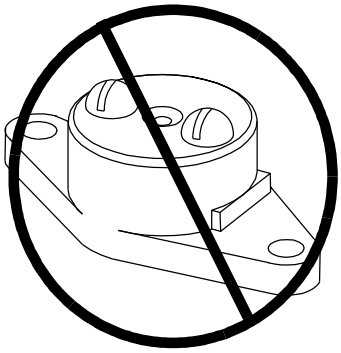

Old

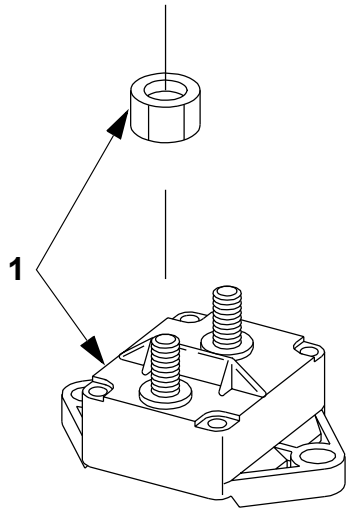

New

© BT Prime-Mover, Inc.

Return

5911-000 Power circuit breaker

ITEM #	PART #	NAME	# FOR ASSY.	UNITS
1	307601-001	Breaker, **105 AMP**	1	**105 AMP**
1	307601-000	Breaker, **150 AMP**	1	**150 AMP**

© BT Prime-Mover, Inc.

This page intentionally left blank

© BT Prime-Mover Inc.

Return

6000
Hydraulic System

© BT Prime-Mover Inc.

Return

6100-000

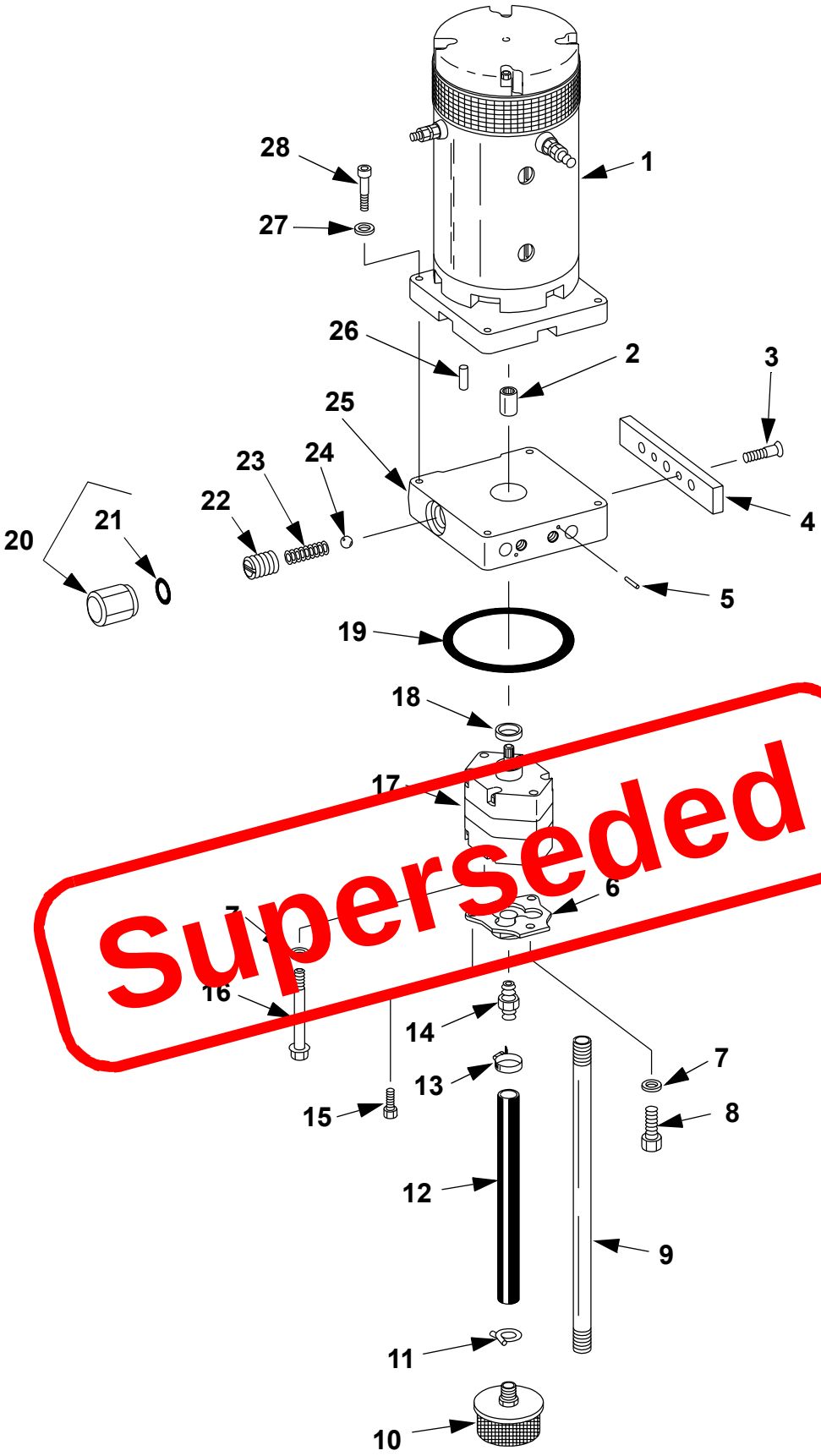

Superseded

© BT Prime-Mover, Inc.

Return

6100-000 Hydraulic pump (Model # DM-1005)

ITEM #	PART #	NAME	# FOR ASSY.	UNITS
*	305008-000	Pump and Motor Assembly	1	
1	----------	Pump motor assembly (See Fig.# 1750-000)	1	
2	202324	Coupler	1	
3	305999-000	Screw, flat head	2	
4	306000-000	Mounting	1	
5	201450	Pin	2	
6	306001-000	Cover	1	
7	300947-009	Lockwasher	3	
8	300947-007	Screw, cap	1	
9	306002-000	Tube, **14 in. [356 mm]** long	1	
10	306060-000	Filter	1	
11	306062-000	Clamp	1	
12	306059-000	Hose	1	
13	306012-000	Clamp	1	
14	306061-000	Adapter	1	
15	300947-012	Screw, cap	2	
16	306003-000	Bolt	2	
17	306004-000	Pump assembly	1	
18	202393	Seal, oil	1	
19	202315	O ring	1	
20	201489	Cap, relief	1	
21	NSS	O ring	1	
22	201512	Screw, relief adjuster	1	
23	306005-000	Spring	1	
24	300947-008	Ball	1	
25	306009-000	Endhead	1	
26	306007-000	Pin, dowel	2	
27	300647-061	Lockwasher	4	
28	306006-000	Screw, socket head	4	

Superseded



© BT Prime-Mover, Inc.

6100-001

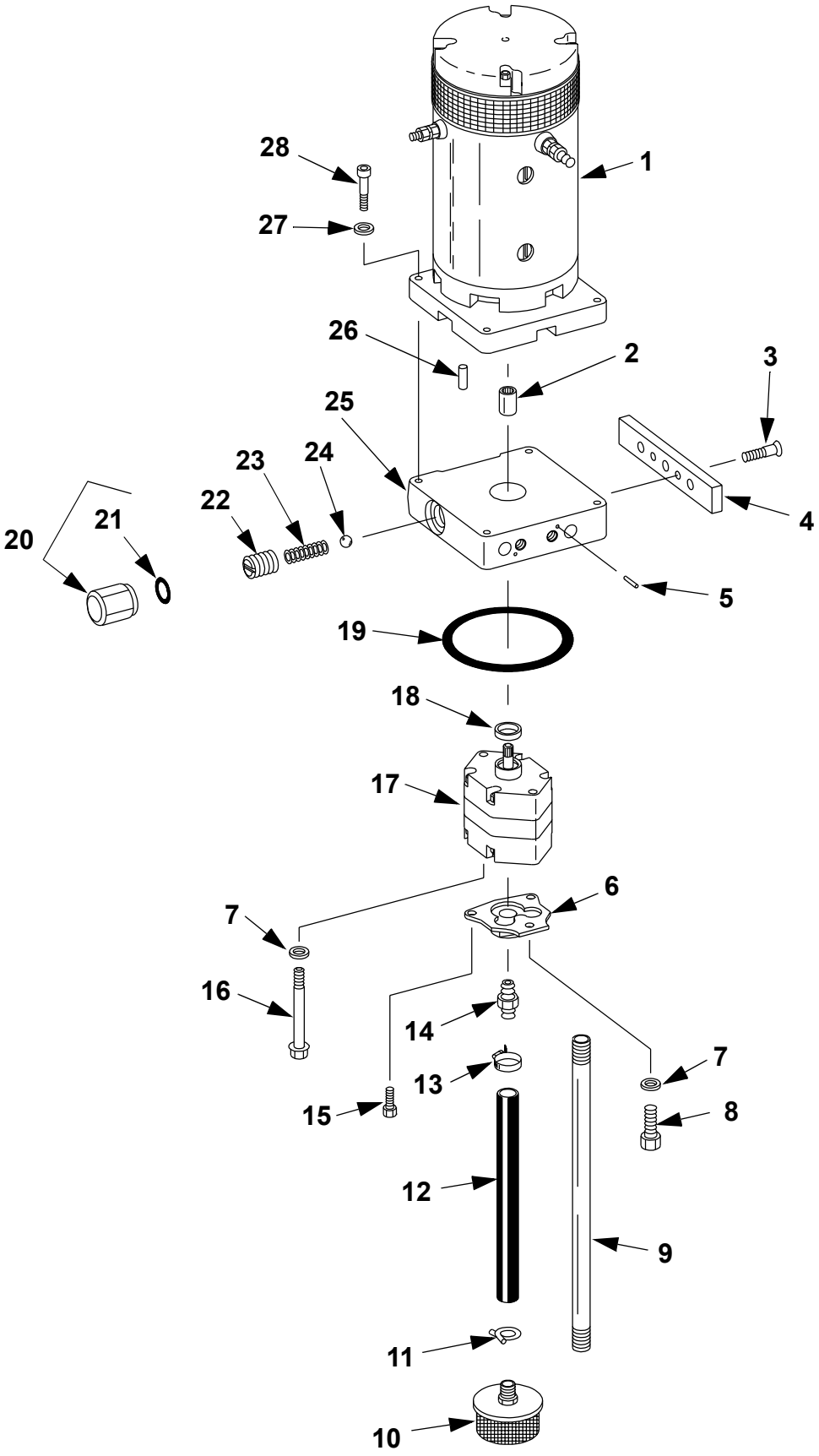

© BT Prime-Mover, Inc.

6100-001 Hydraulic pump (Model # DM-1006)

ITEM #	PART #	NAME	# FOR ASSY.	UNITS
*	305008-001	Pump and Motor Assembly	1	
1	----------	Pump motor assembly (See Fig.# 1750-000)	1	
2	202324	Coupler	1	
3	305999-000	Screw, flat head	2	
4	306000-000	Mounting	1	
5	201450	Pin	2	
6	306001-000	Cover	1	
7	300947-009	Lockwasher	3	
8	300947-007	Screw, cap	1	
9	306002-000	Tube, **14 in. [356 mm]** long	1	
10	306060-000	Filter	1	
11	306062-000	Clamp	1	
12	306059-000	Hose	1	
13	306012-000	Clamp	1	
14	306061-000	Adapter	1	
15	300947-012	Screw, cap	2	
16	306670-000	Bolt	2	
17	306671-000	Pump assembly **(5.0 GPM)**	1	
18	202393	Seal, oil	1	
19	202315	O ring	1	
20	201489	Cap, relief	1	
21	NSS	O ring	1	
22	201512	Screw, relief adjuster	1	
23	306005-000	Spring	1	
24	300947-008	Ball	1	
25	306009-000	Endhead	1	
26	306007-000	Pin, dowel	2	
27	300647-061	Lockwasher	4	
28	306006-000	Screw, socket head	4	

© BT Prime-Mover, Inc.

6110-001

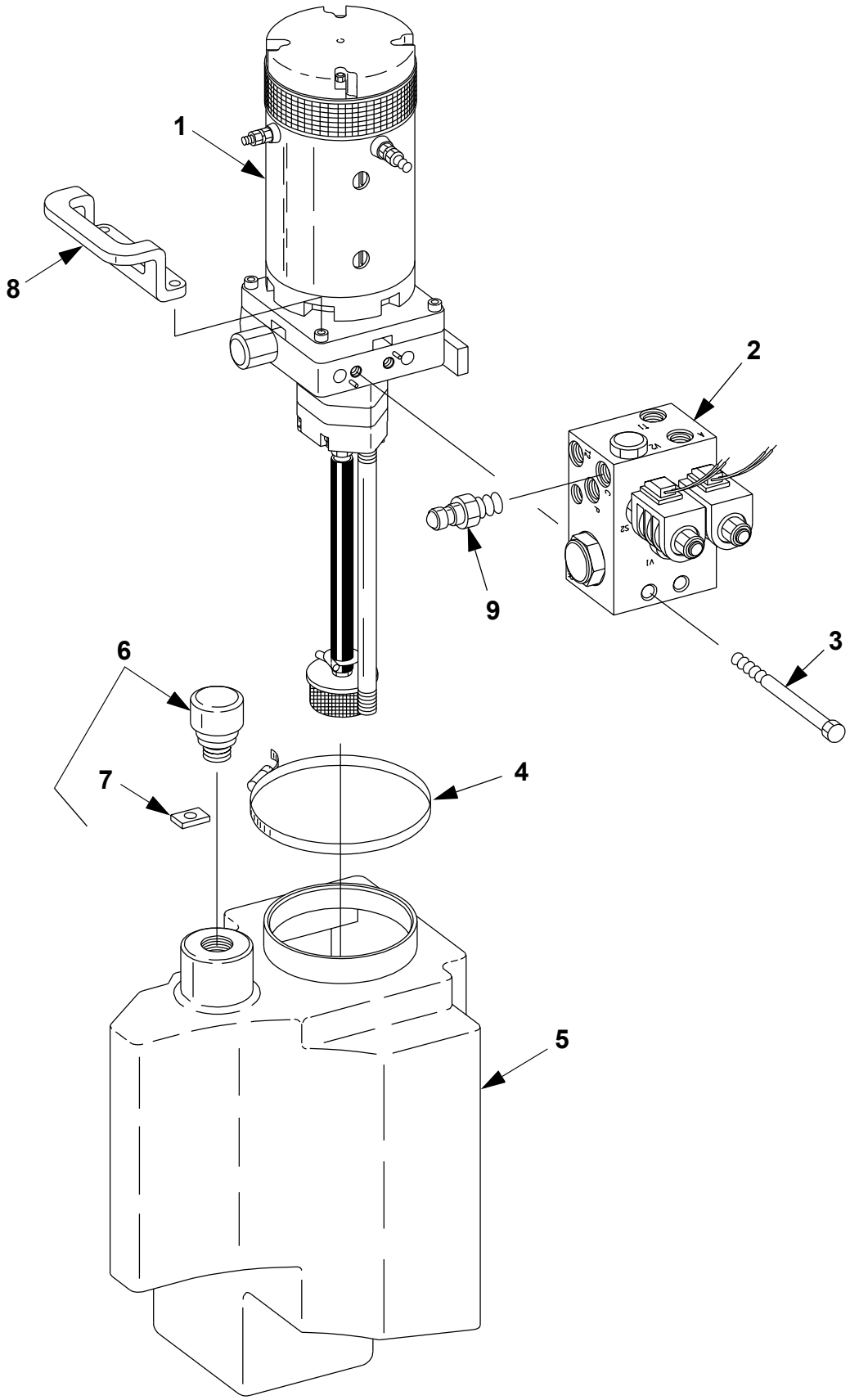

© BT Prime-Mover, Inc.

6110-001 Hydraulic tank

ITEM #	PART #	NAME	# FOR ASSY.	UNITS
1	----------	Pump & motor assembly (See Fig.# 6100-001)	1	
2	----------	Solenoid valve assembly (See Fig.# 6170-000)	1	
3	301652-090	Screw, cap	2	
4	305009-000	Clamp	1	
5	303872-000	Reservoir	1	
6	305010-000	Breather kit	1	
7	13928-00	Magnet	1	
8	305716-000	Handle	1	
9	49587-01	Fitting, diagnostic	1	

© BT Prime-Mover, Inc.

6120-001

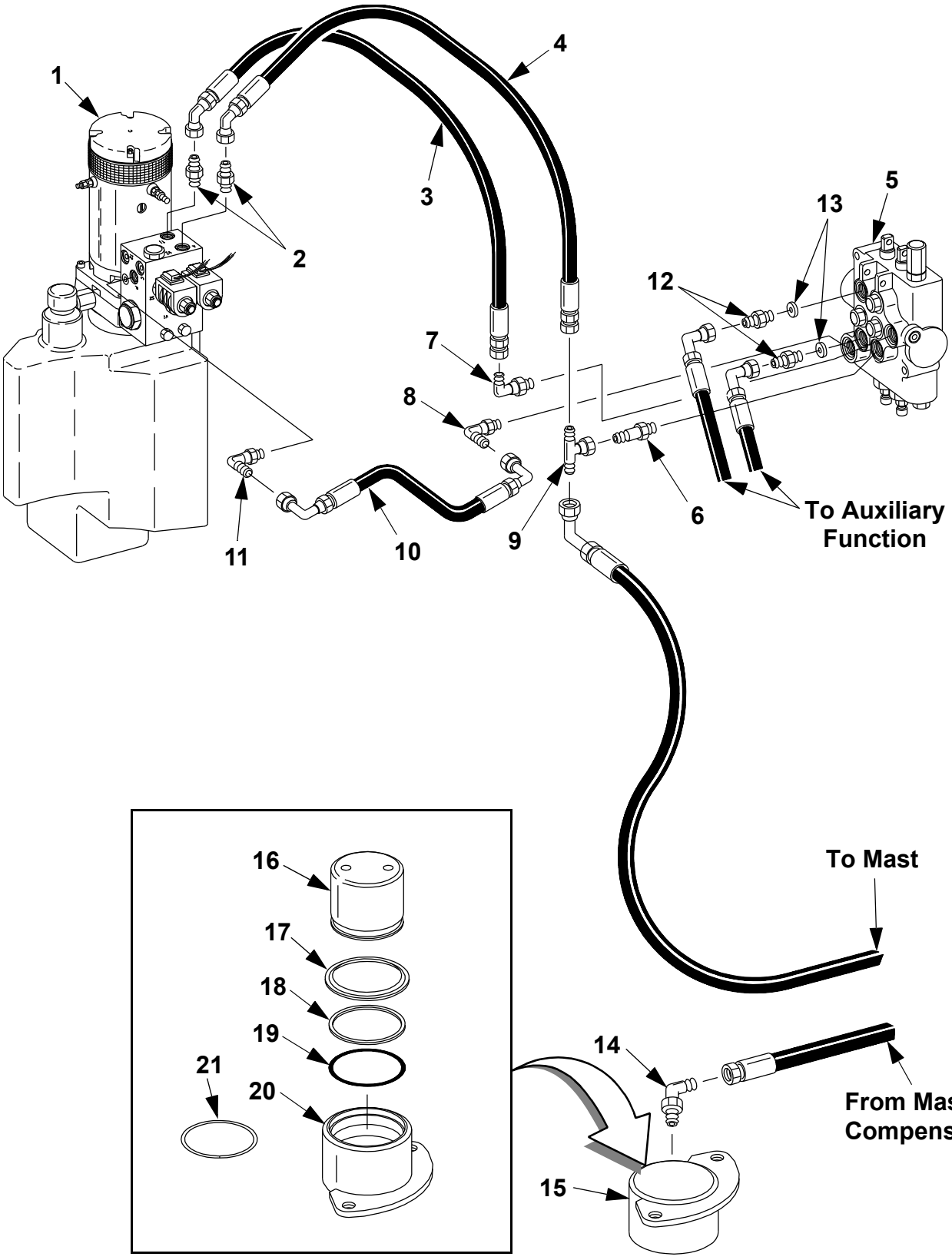

© BT Prime-Mover, Inc.

Return

6120-001 Hoses, pipes, connections, mounting points

ITEM #	PART #	NAME	# FOR ASSY.	UNITS
1	----------	Pump & tank assembly (See Fig.# 6110-001)	1	
2	49656-01	Fitting, adapter	2	
3	49517-17	Hose, spool valve to tank	1	
4	49517-17	Hose, mast raise/lower	1	
5	----------	Spool valve assembly (See Fig.# 6160-100)	1	
6	49655-01	Fitting, adapter	1	
7	49653-01	Fitting, 90º	1	
8	49653-01	Fitting, 90º	1	
9	49616-01	Fitting, tee	1	
10	49517-18	Hose assembly	1	
11	49653-01	Fitting, 90º	1	
12	49656-08	Fitting, adapter	2	
13	306374-002	Orifice	2	
14	49654-01	Elbow, 45º	1	
15	305755-000	Compensator cylinder assembly	1	
16	NA	Rod	1	
17K	NSS	Ring, wiper	1	
18K	NSS	Ring, backup	1	
19K	NSS	O Ring	1	
20	NA	Cylinder	1	
21K	NSS	Ring, retainer	1	
K	305755-010	Kit, compensator seal	1	

© BT Prime-Mover, Inc.

6124-001

Serial Number
27029001 - UP

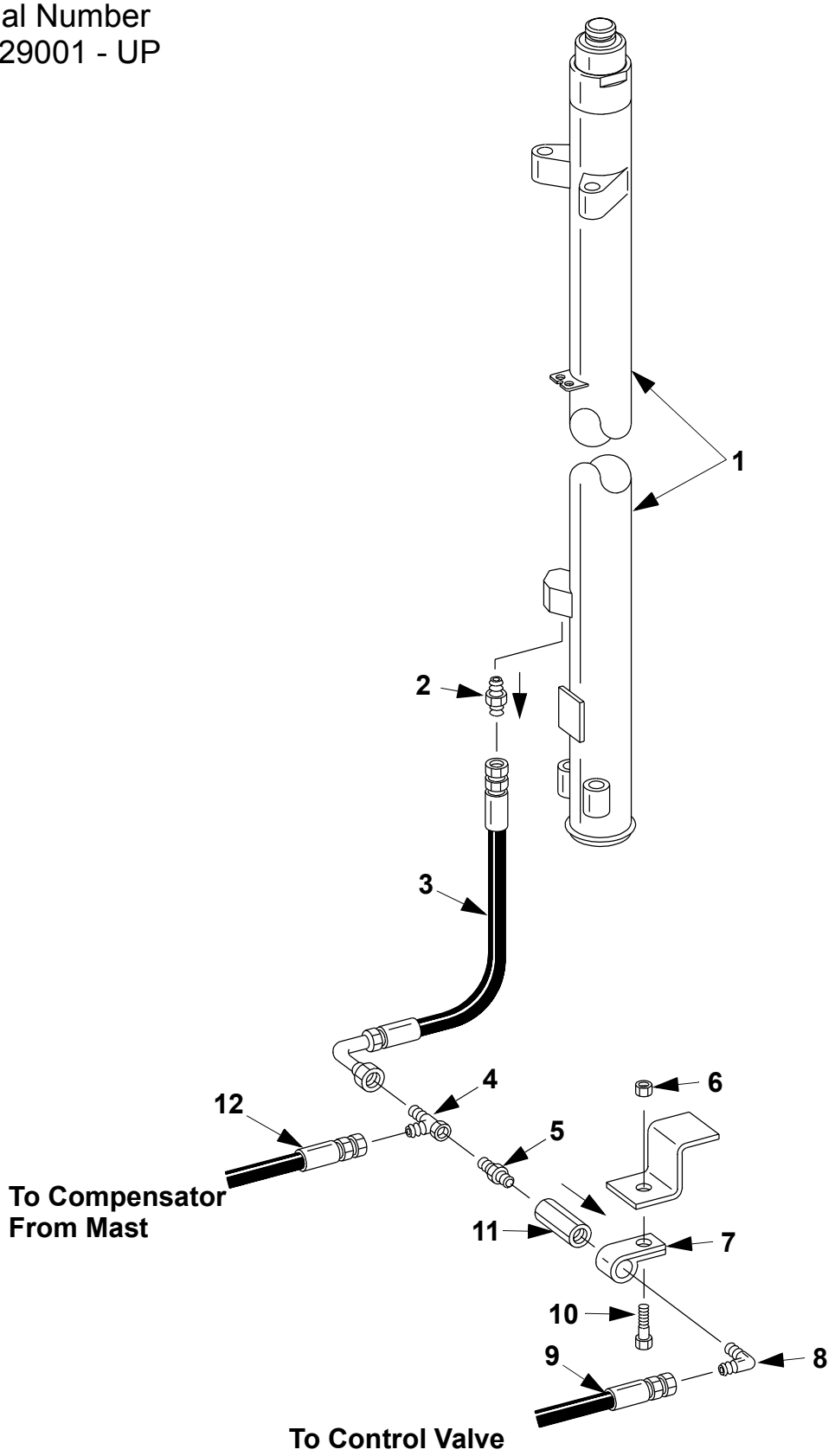

© BT Prime-Mover, Inc.

6124-001 Two stage mast lines Serial Number 27029001 - UP

ITEM #	PART #	NAME	# FOR ASSY.	UNITS
1	----------	Cylinder assembly (See Fig.# 6610-100)	1	
2	26907-01	Valve, flow limiting	1	
3	49517-35	Hose	1	
4	49615-01	Fitting, Tee	1	
5	49656-12	Fitting, adaptor	1	
6	301960-008	Nut	1	
7	15677-15	Clamp	1	
8	49653-13	Elbow, 90°	1	
9	49517-34	Hose	1	
10	301652-016	Screw, cap	1	
11	21037-05	Regulator, flow	1	
12	49517-33	Hose	1	

© BT Prime-Mover, Inc.

6124-100

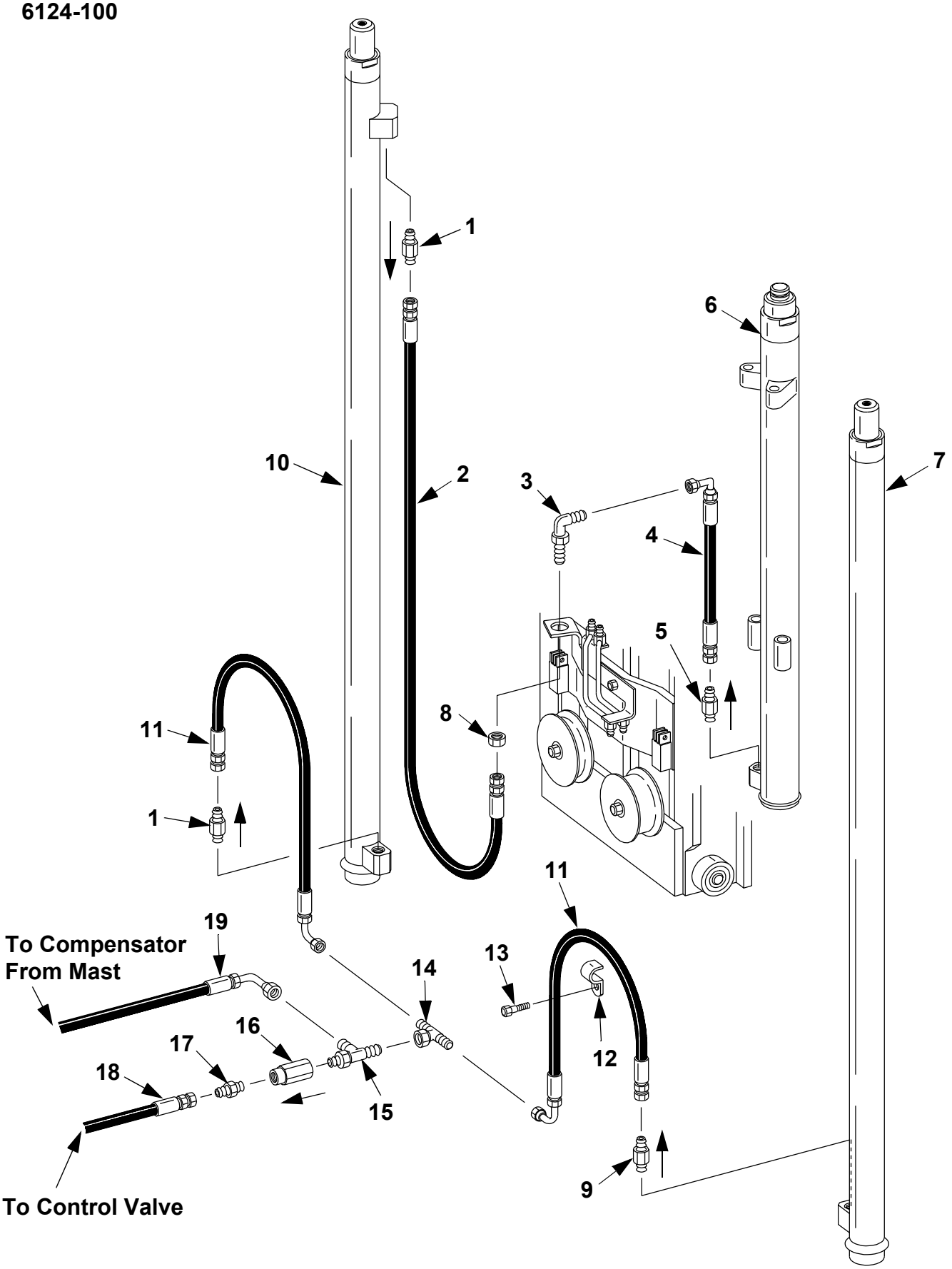

© BT Prime-Mover, Inc.

Return

6124-100 Three stage mast lines

ITEM #	PART #	NAME	# FOR ASSY.	UNITS
1	26907-01	Valve, flow limit **(10 GPM)**	2	**10 GPM**
2	49641-54	Hose assembly, **71/150**	1	**71/150**
2	49641-55	Hose assembly, **83/180**	1	**83/180**
2	49641-56	Hose assembly, **87/189**	1	**87/189**
3	49634-02	Fitting, 90° bulkhead	1	
4	49516-49	Hose assembly	1	
5	26907-00	Valve, flow limit **(16 GPM)**	1	**16 GPM**
6	----------	Freelift cylinder assembly (Ses Fig.# 6620-200)	1	
7	----------	Staging cylinder assembly (See Fig.# 6610-200)	1	**1 Port**
8	49624-02	Nut	1	
9	26907-02	Valve, flow limit **(7.5 GPM)**	1	**7.5 GPM**
10	----------	Staging cylinder assembly (See Fig.# 6610-200)	1	**2 Ports**
11	49517-29	Hose	2	
12	15677-10	Clamp	3	
13	301951-016	Screw, cap	3	
14	49616-01	Tee	1	
15	49652-01	Tee	1	
16	21037-04	Regulator, flow	1	
17	49656-01	Fitting, adapter	1	
18	49517-19	Hose	1	
19	49517-33	Hose	1	

© BT Prime-Mover, Inc.

6125-100

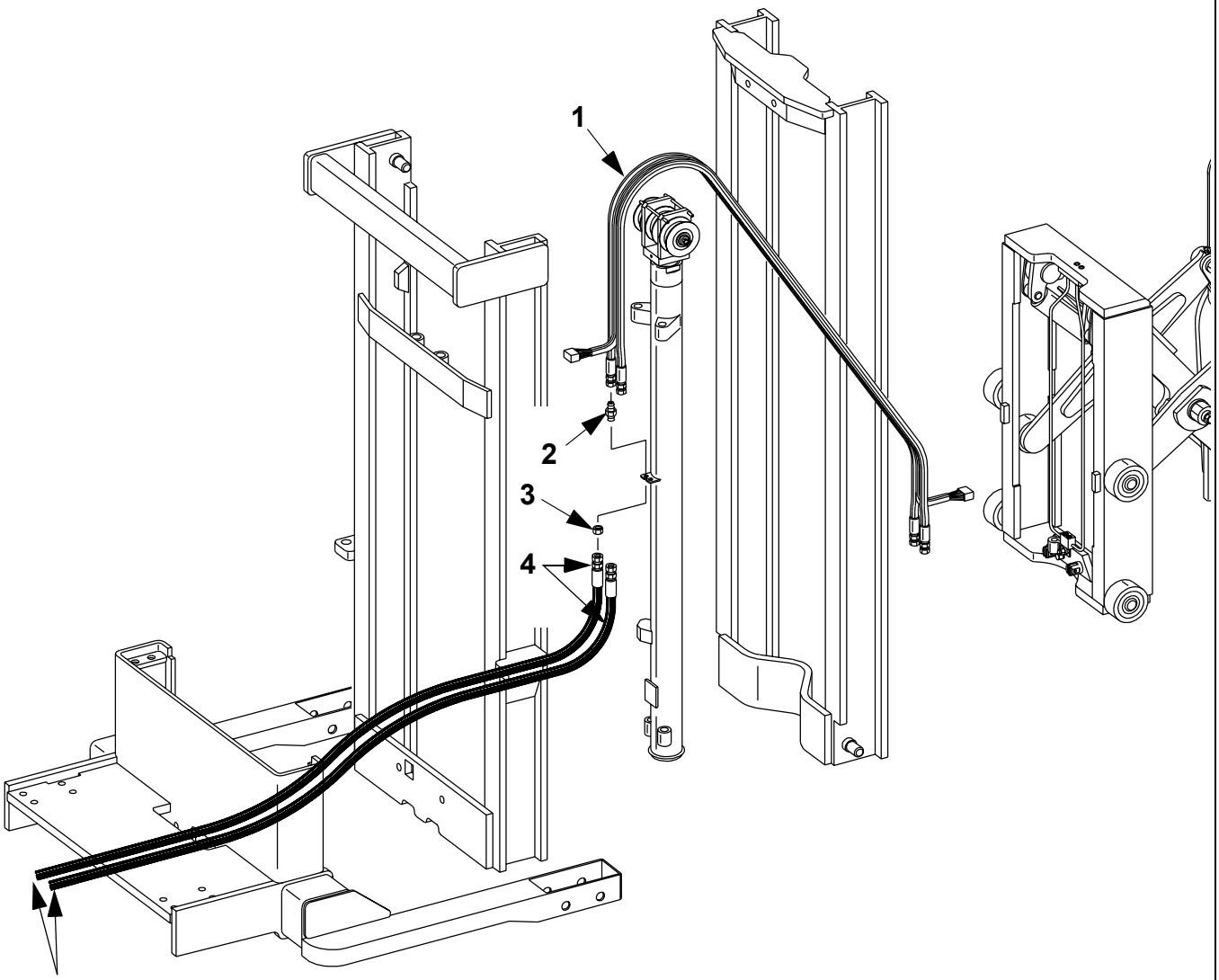

© BT Prime-Mover, Inc.

Return

6125-100 Two stage mast reach supply lines

ITEM #	PART #	NAME	# FOR ASSY.	UNITS
1	307107-006	Hose assembly **(Hose & Harness)**, **71/100**	1	**71/100**
1	307107-007	Hose assembly **(Hose & Harness)**, **83/124**	1	**83/124**
1	307107-008	Hose assembly **(Hose & Harness)**, **95/150**	1	**95/150**
2	49632-00	Fitting, bulkhead	2	
3	49624-00	Nut	2	
4	311381-029	Hose	2	

© BT Prime-Mover, Inc.

6125-200

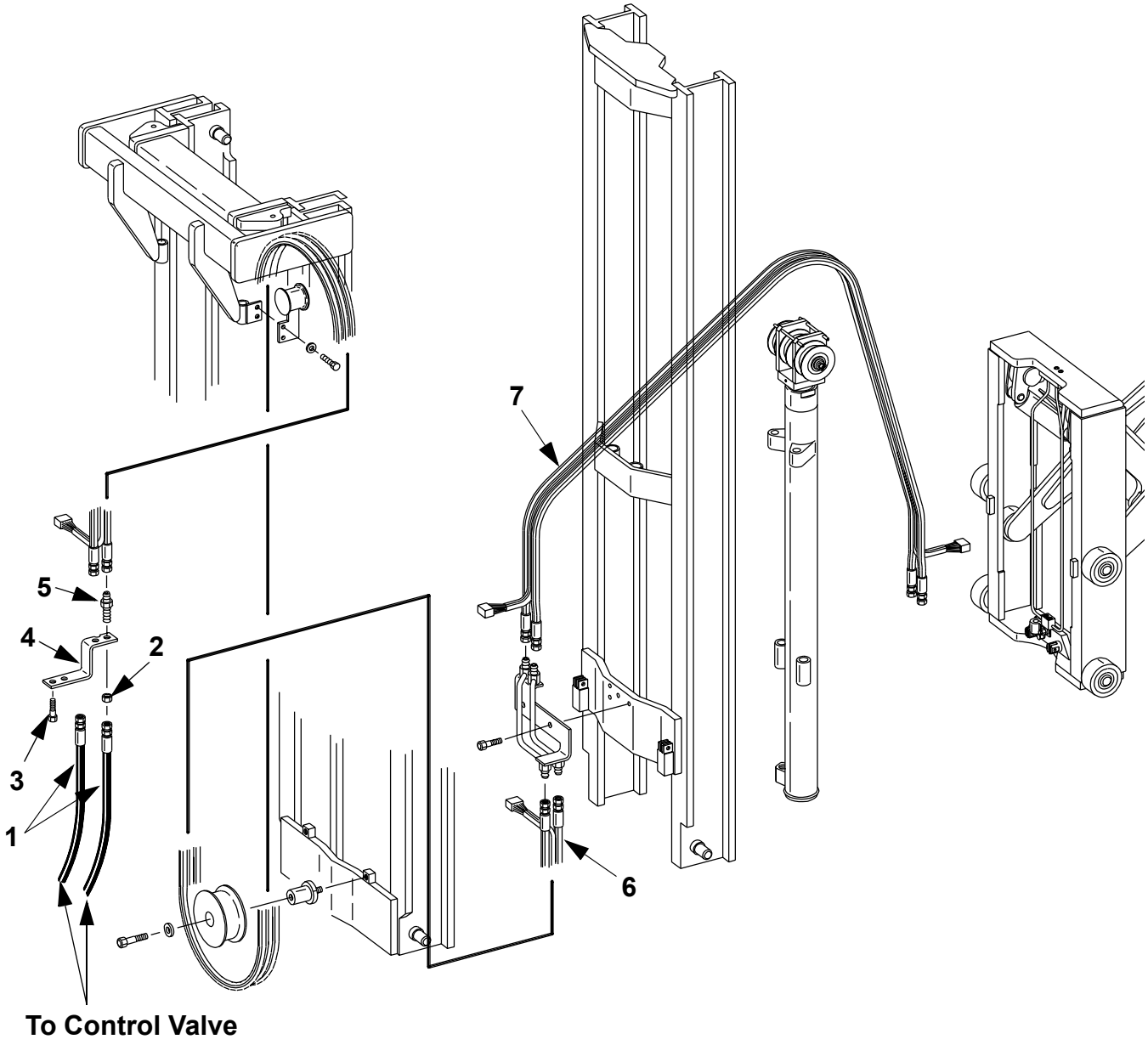

© BT Prime-Mover, Inc.

Return

6125-200 Three stage mast reach supply lines

ITEM #	PART #	NAME	# FOR ASSY.	UNITS
1	311381-029	Hose	2	
2	49624-00	Nut	2	
3	301652-025	Screw, cap	2	
4	306898-000	Anchor	1	
5	49632-00	Fitting, adapter	2	
6	307107-003	Hose assembly **(Hose & Harness)**, **71/150**	1	**71/150**
6	307107-004	Hose assembly **(Hose & Harness)**, **83/180**	1	**83/180**
6	307107-005	Hose assembly **(Hose & Harness)**, **87/189**	1	**87/189**
7	307107-000	Hose assembly **(Hose & Harness)**, **71/150**	1	**71/150**
7	307107-001	Hose assembly **(Hose & Harness)**, **83/180**	1	**83/180**
7	307107-002	Hose assembly **(Hose & Harness)**, **87/189**	1	**87/189**

© BT Prime-Mover, Inc.

6126-001

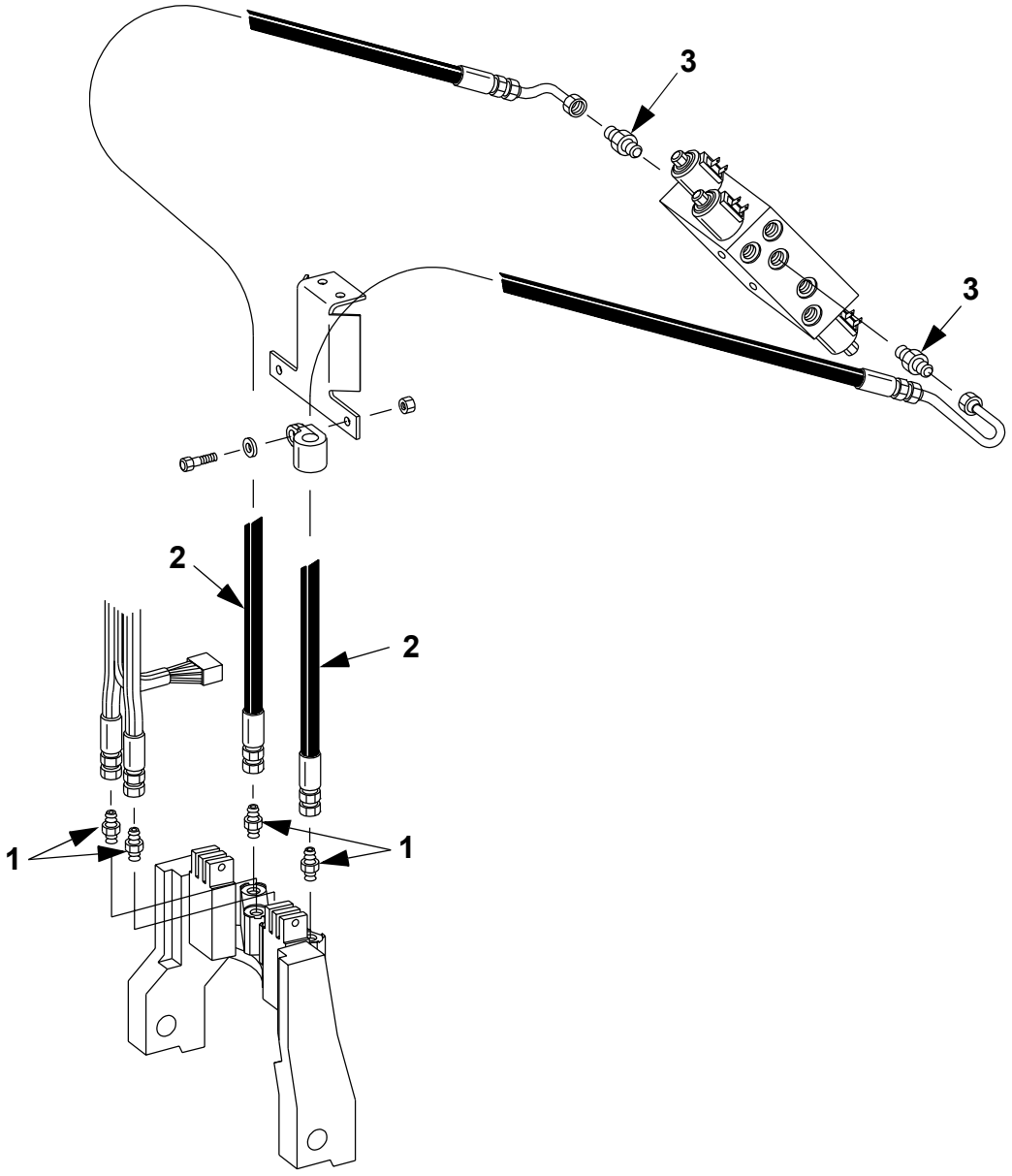

© BT Prime-Mover, Inc.

Return

6126-001 Two Stage reach supply lines

ITEM #	PART #	NAME	# FOR ASSY.	UNITS
1	49656-00	Fitting, adaptor	4	
2	306183-000	Hose	2	
3	49656-08	Fitting, adapter	2	

© BT Prime-Mover, Inc.

6126-100

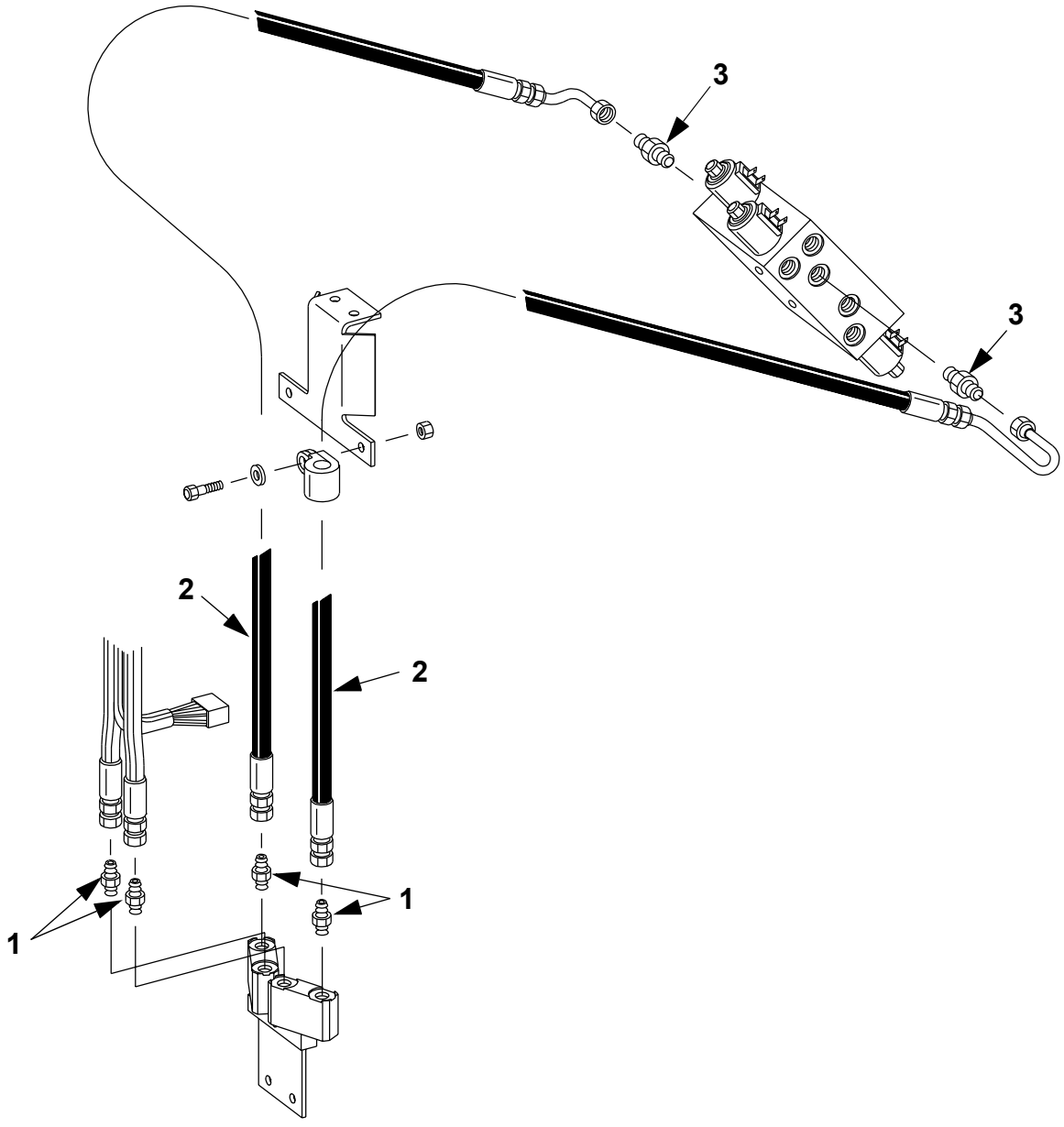

© BT Prime-Mover, Inc.

Return

6126-100 Three Stage reach supply lines

ITEM #	PART #	NAME	# FOR ASSY.	UNITS
1	49656-00	Fitting, adaptor	4	
2	306183-001	Hose	2	
3	49656-08	Fitting, adapter	2	

© BT Prime-Mover, Inc.

6127-002

Serial Number
29125001 - UP

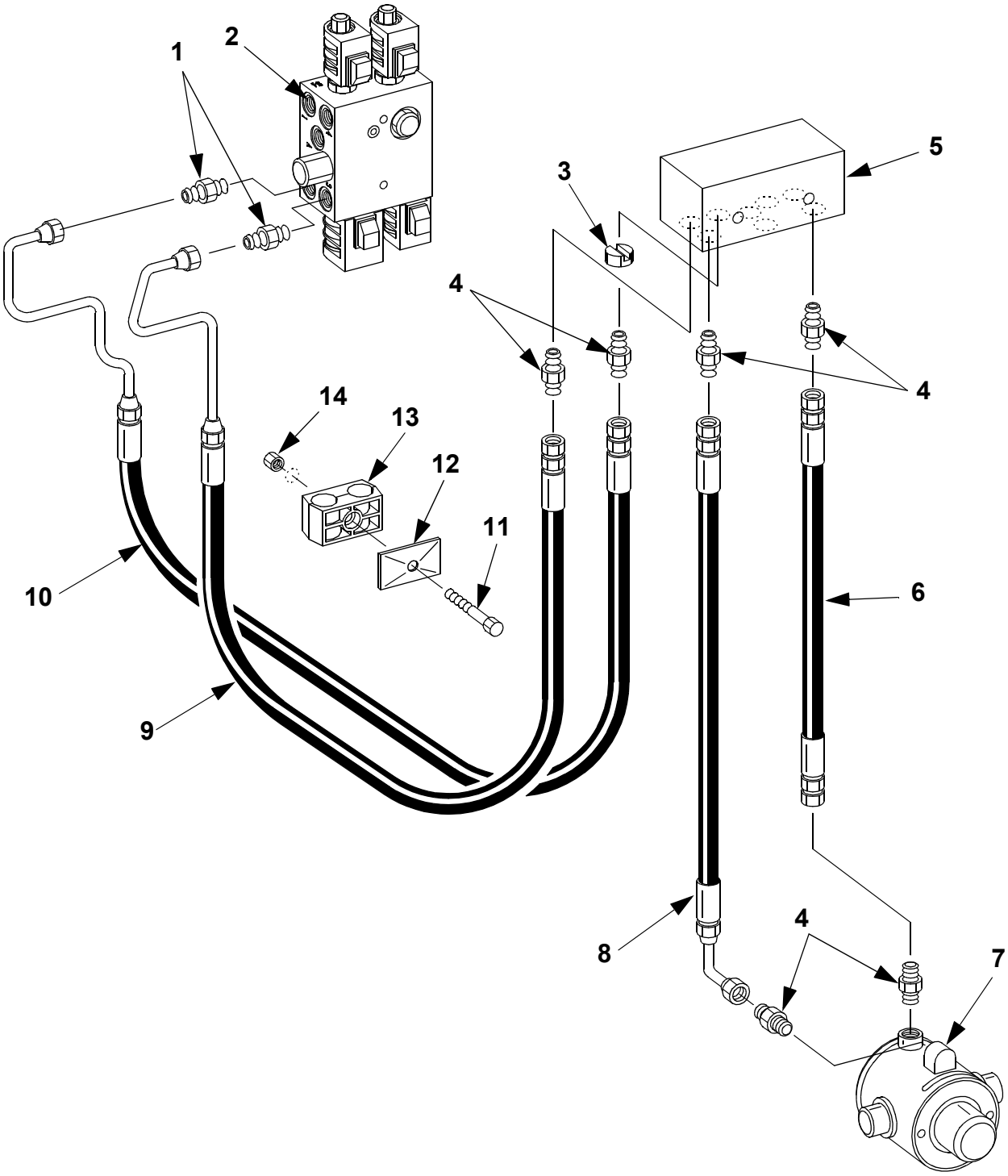

© BT Prime-Mover, Inc.

Return

6127-002 Reach, tilt cylinder hoses Serial Number 29125001 - UP

ITEM #	PART #	NAME	# FOR ASSY.	UNITS
1	49656-08	Fitting, adapter	2	
2	----------	Control valve with NO sideshifter (See Fig.# 6220-002)	1	
2	----------	Control valve with sideshifter (See Fig.# 6220-102)	1	
3	25969-05	Orifice	1	
4	49656-00	Fitting, adapter	6	
5	----------	Manifold (See Fig.# 7241-003)	1	
6	311381-036	Hose assembly	1	
7	----------	Tilt cylinder assembly (See Fig.# 6660-001)	1	
8	311381-035	Hose assembly	1	
9	306182-000	Hose assembly	1	
10	308558-000	Hose assembly	1	
11	24488	Screw	1	
12	306258-000	Cover	1	
13	306050-000	Clamp	1	
14	301960-006	Nut	1	

© BT Prime-Mover, Inc.

6128-002

Serial Number
29125001 - UP

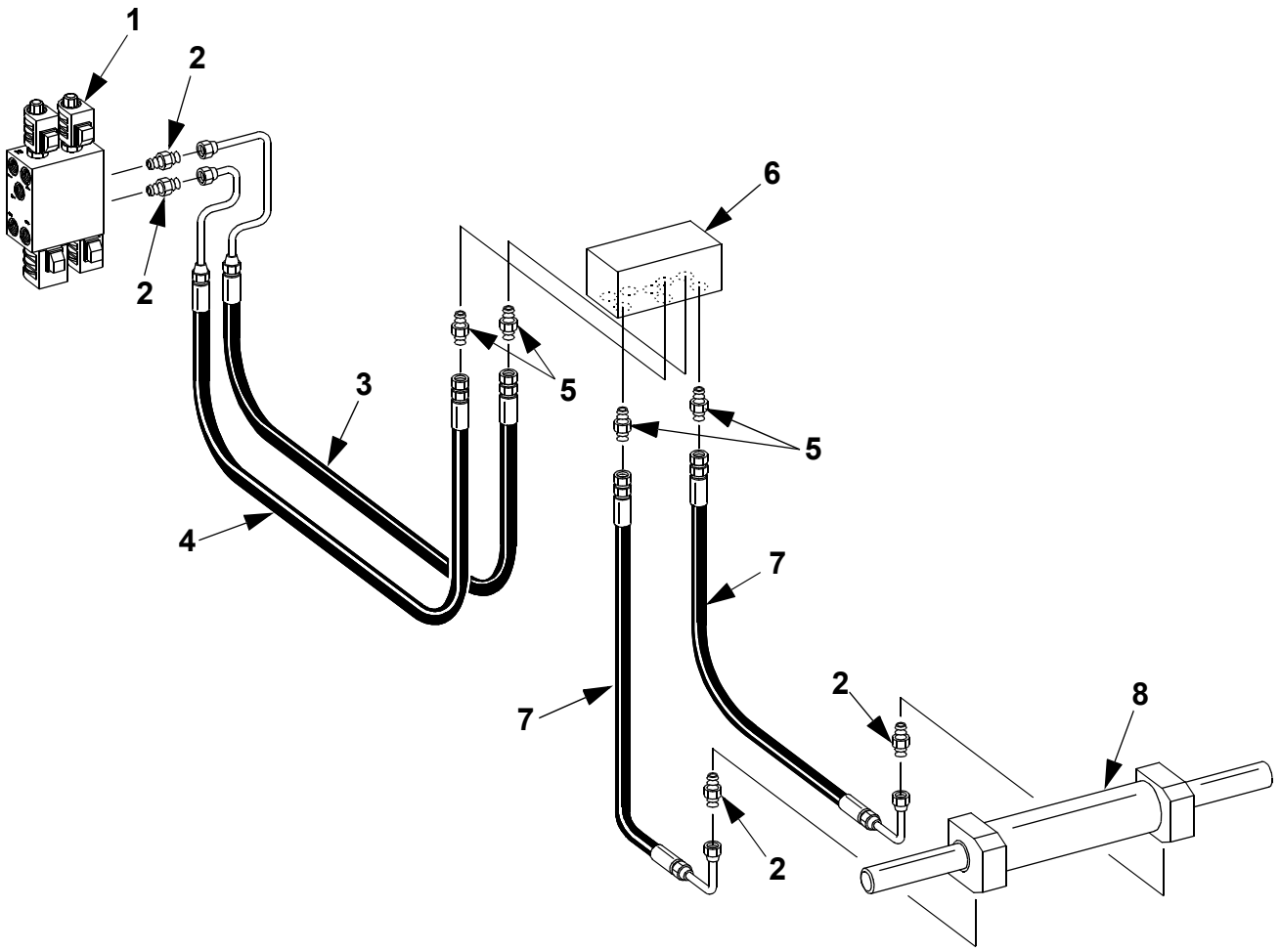

© BT Prime-Mover, Inc.

Return

6128-002 Reach, sideshifter cylinder hoses Serial Number 29125001 - UP

ITEM #	PART #	NAME	# FOR ASSY.	UNITS
1	----------	Control valve with sideshifter (See Fig.# 6220-102)	1	
2	49656-08	Adapter	4	
*	12318-05	Plug, **No Sideshifter** (9/16-18)	2	
3	308559-000	Hose	1	
4	308557-000	Hose	1	
5	49656-00	Adapter	4	
*	12318-03	Plug, **No Sideshifter** (7/16-20)	4	
6	----------	Manifold (See Fig.# 7241-003)	1	
7	49643-39	Hose	2	
8	----------	Sideshifter cylinder (See Fig.# 7210-001)	1	

© BT Prime-Mover, Inc.

6129-001

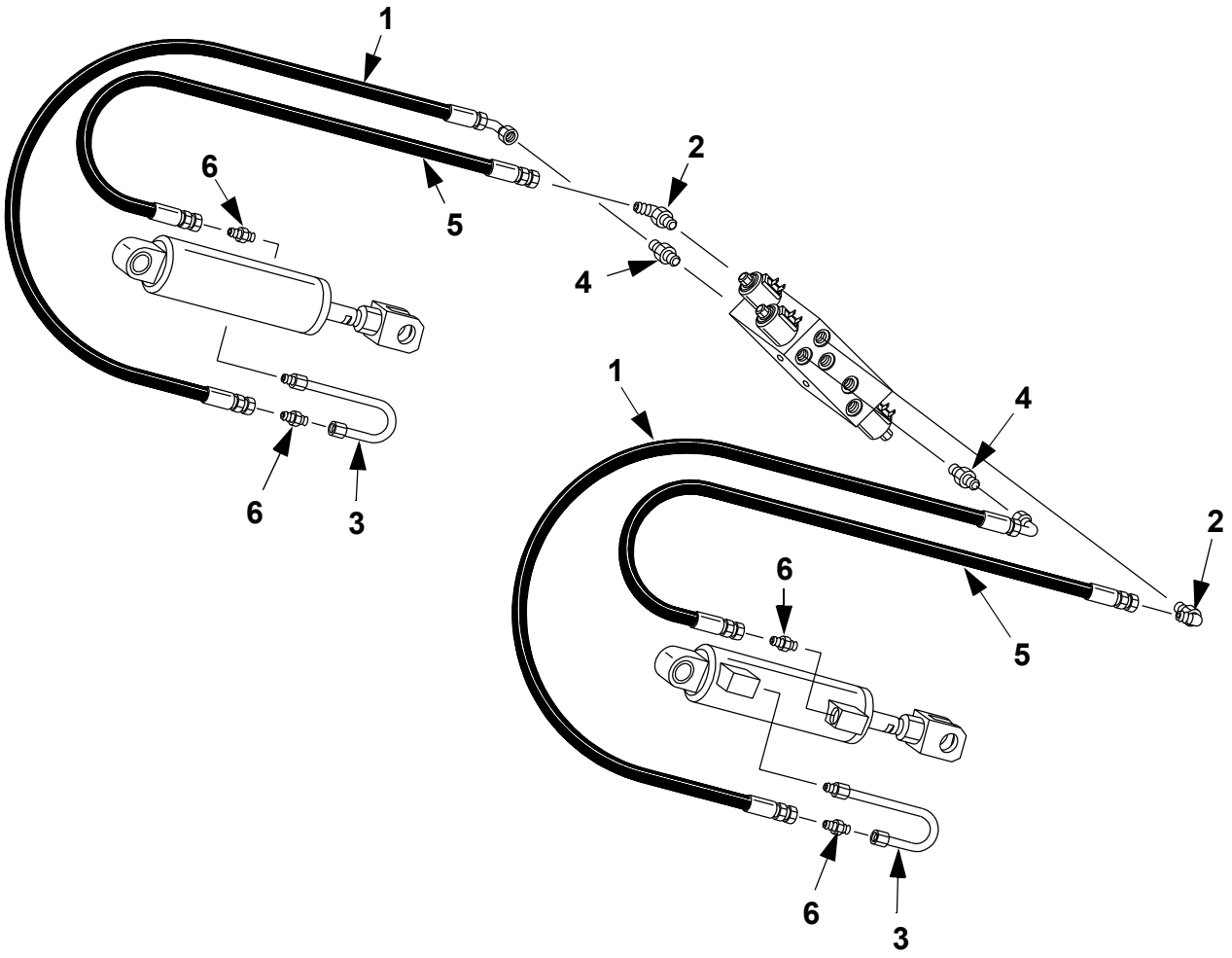

© BT Prime-Mover, Inc.

Return

6129-001 Reach, reach cylinders hoses

ITEM #	PART #	NAME	# FOR ASSY.	UNITS
1	49643-30	Hose	2	
*	52-05103-00	Hose, guard	As Req'd.	
*	25332-04	Tie, wire	4	
2	49653-08	Elbow, 90°	2	
3	305629-000	Tube	2	
4	49656-08	Fitting, adapter	2	
5	49643-31	Hose	2	
*	52-05103-00	Hose, guard	As Req'd.	
*	25332-04	Tie, wire	4	
6	49656-00	Fitting, adapter	4	

© BT Prime-Mover, Inc.

6160-100

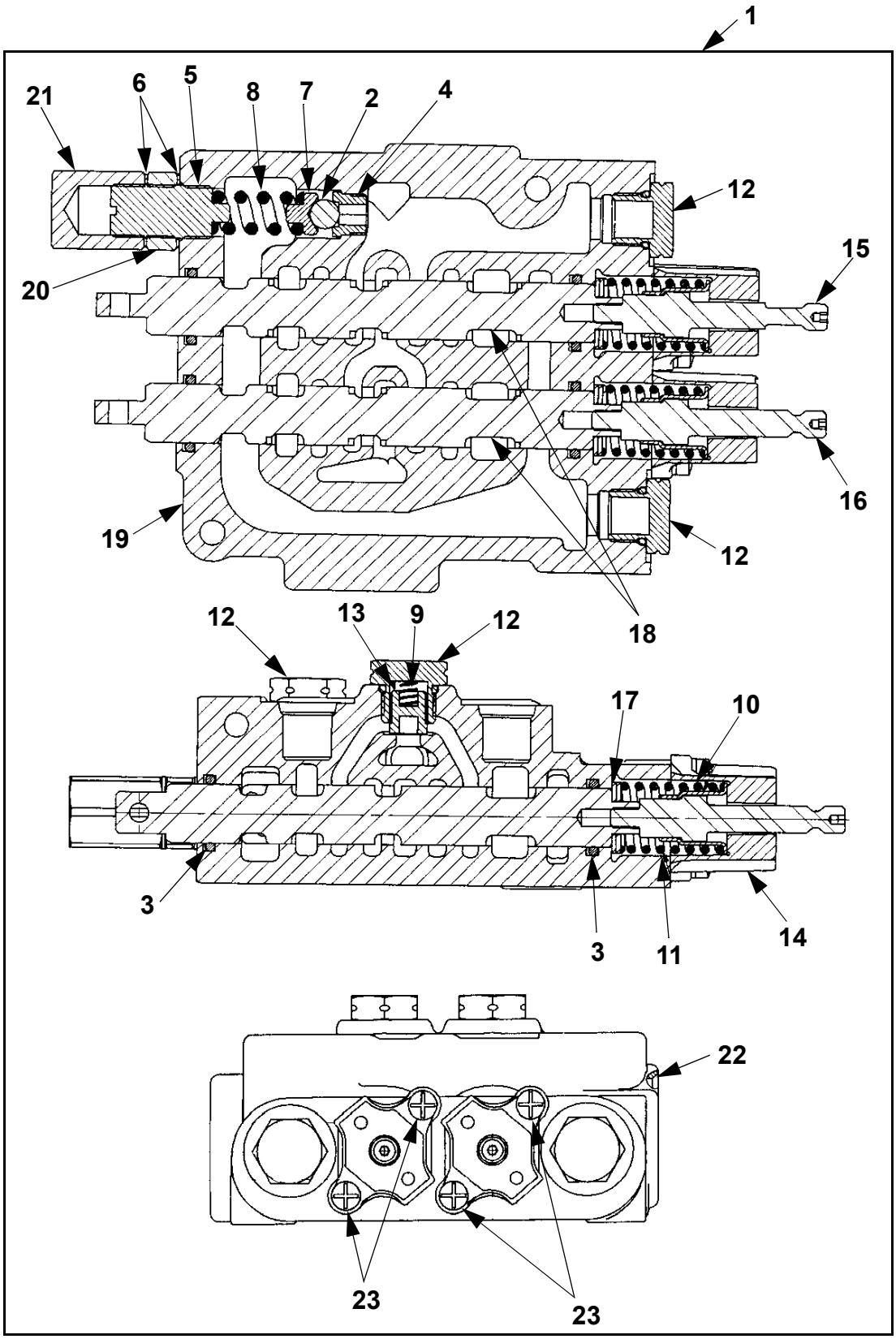

© BT Prime-Mover, Inc.

Return

6160-100 Two spool control valve

ITEM #	PART #	NAME	# FOR ASSY.	UNITS
1	305938-000	Control Valve Assembly, Two Spool	1	
2	306120-000	Ball	1	
3	306123-000	O ring	4	
4	306125-000	Seat, valve	1	
5	306126-000	Screw, adjustment	1	
6	306127-000	Gasket	2	
7	306128-000	Retainer, ball	1	
8	306129-000	Spring	1	
9	306130-000	Spring, load check	2	
10	306131-000	Spacer	2	
11	306132-000	Spring	2	
12	306133-000	Plug assembly	4	
13	306134-000	Poppet	2	
14	306135-000	Cap, end	2	
15	306143-000	Detent, spool	1	
16	306467-000	Detent, spool	1	
17	306136-000	Washer	4	
18	306137-000	Spool, “T”	2	
19	NA	Body	1	
20	306139-000	Nut, jam	1	
21	306140-000	Cap, relief	1	
22	306141-000	Plug	1	
23	306142-000	Lockwasher and screw	4	

© BT Prime-Mover, Inc.

6170-000

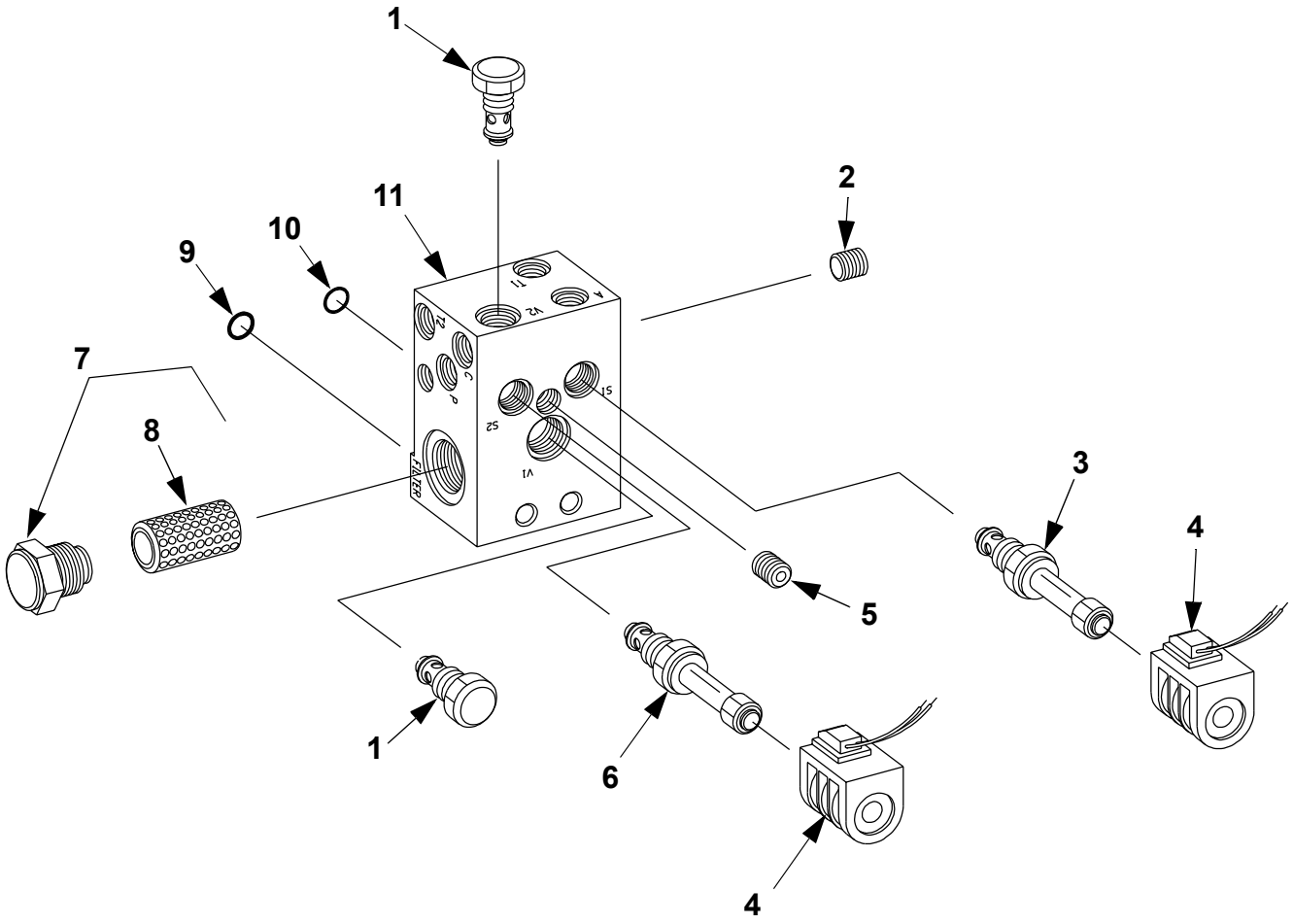

© BT Prime-Mover, Inc.

Return

6170-000 Pressure / flow control valve

ITEM #	PART #	NAME	# FOR ASSY.	UNITS
*	305021-000	Solenoid Control Valve Assembly	1	
1	305117-000	Valve, check	2	
2	305128-000	Plug, large	6	
3	305118-000	Valve, N.C.	1	
*	305119-000	Kit, Seal **(for item number 3)**	1	
4	305122-000	Coil	2	
5	305127-000	Plug, small	3	
6	305120-000	Valve, 3 way 2 position	1	
*	305121-000	Kit, seal **(for item number 6)**	1	
7	305123-000	Filter assembly	1	
8	305124-000	Filter	1	
9	305125-000	O Ring	1	
10	305126-000	O Ring	1	
11	NA	Body	1	

© BT Prime-Mover, Inc.

6220-002

Serial Number
30348001 - UP

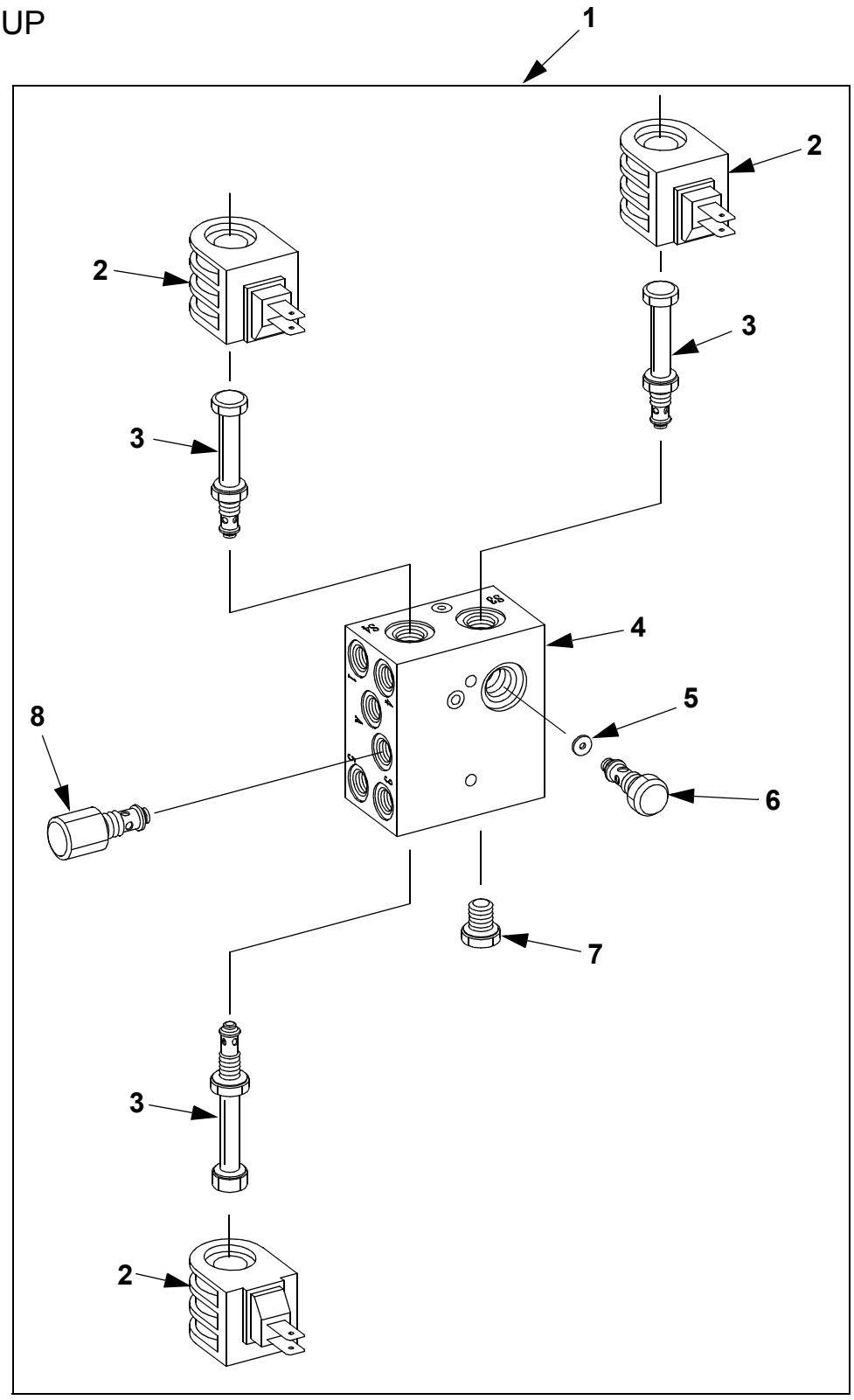

© BT Prime-Mover, Inc.

Return

6220-002 Control valve with No Sideshifter Serial Number 30348001 - UP

ITEM #	PART #	NAME	# FOR ASSY.	UNITS
*	310679-001	Manifold assembly **(No Sideshifter)**	1	
2	304797-000	Coil	3	
3	304795-000	Valve, BI-Directional	3	
*	310526-000	Kit, seal	3	
4	NA	Body	1	
5	310972-000	Orifice, 0.020 inch [0.508 mm]	1	
6	310514-000	Valve, check	1	
*	310524-000	Kit, check seal	1	
7	310973-000	Plug	1	
8	310810-000	Valve, relief	1	
*	310842-000	Kit, seal	1	

© BT Prime-Mover, Inc.

6220-102

Serial Number
30348001 - UP

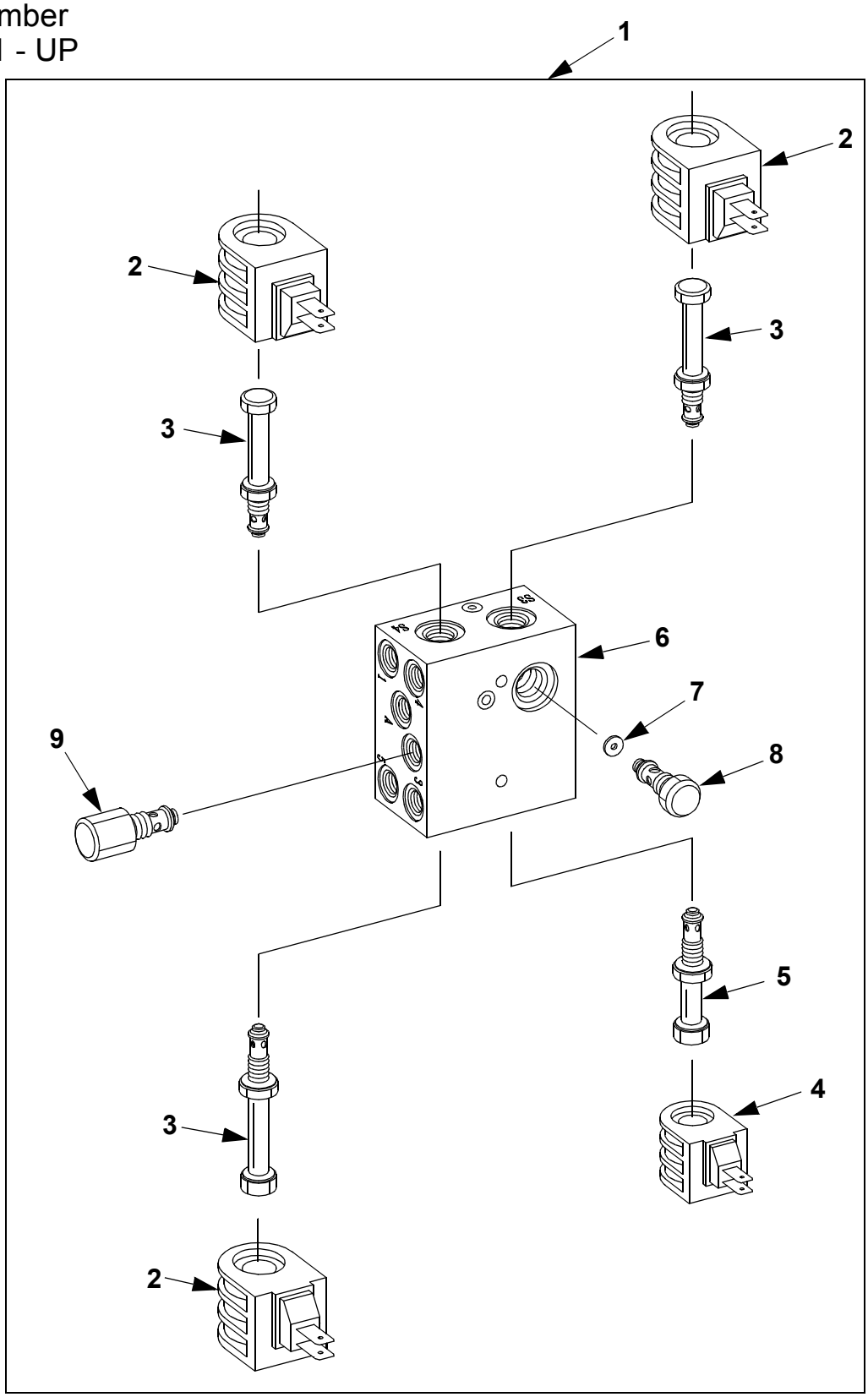

© BT Prime-Mover, Inc.

6220-102 Control valve With Sideshifter Serial Number 30348001 - UP

ITEM #	PART #	NAME	# FOR ASSY.	UNITS
1	310679-000	Manifold assembly **(With Sideshifter)**	1	
2	304797-000	Coil	3	
3	304795-000	Valve, BI-Directional	3	
*	310526-000	Kit, seal	3	
4	304794-000	Coil	1	
5	308328-000	Valve, N.C.	1	
*	309694-000	Kit, seal	1	
6	NA	Body	1	
7	310972-000	Orifice, 0.020 inch [0.508 mm]	1	
8	310514-000	Valve, check	1	
*	310524-000	Kit, check seal	1	
9	310810-000	Valve, relief	1	
*	310842-000	Kit, seal	1	

© BT Prime-Mover, Inc.

6610-100

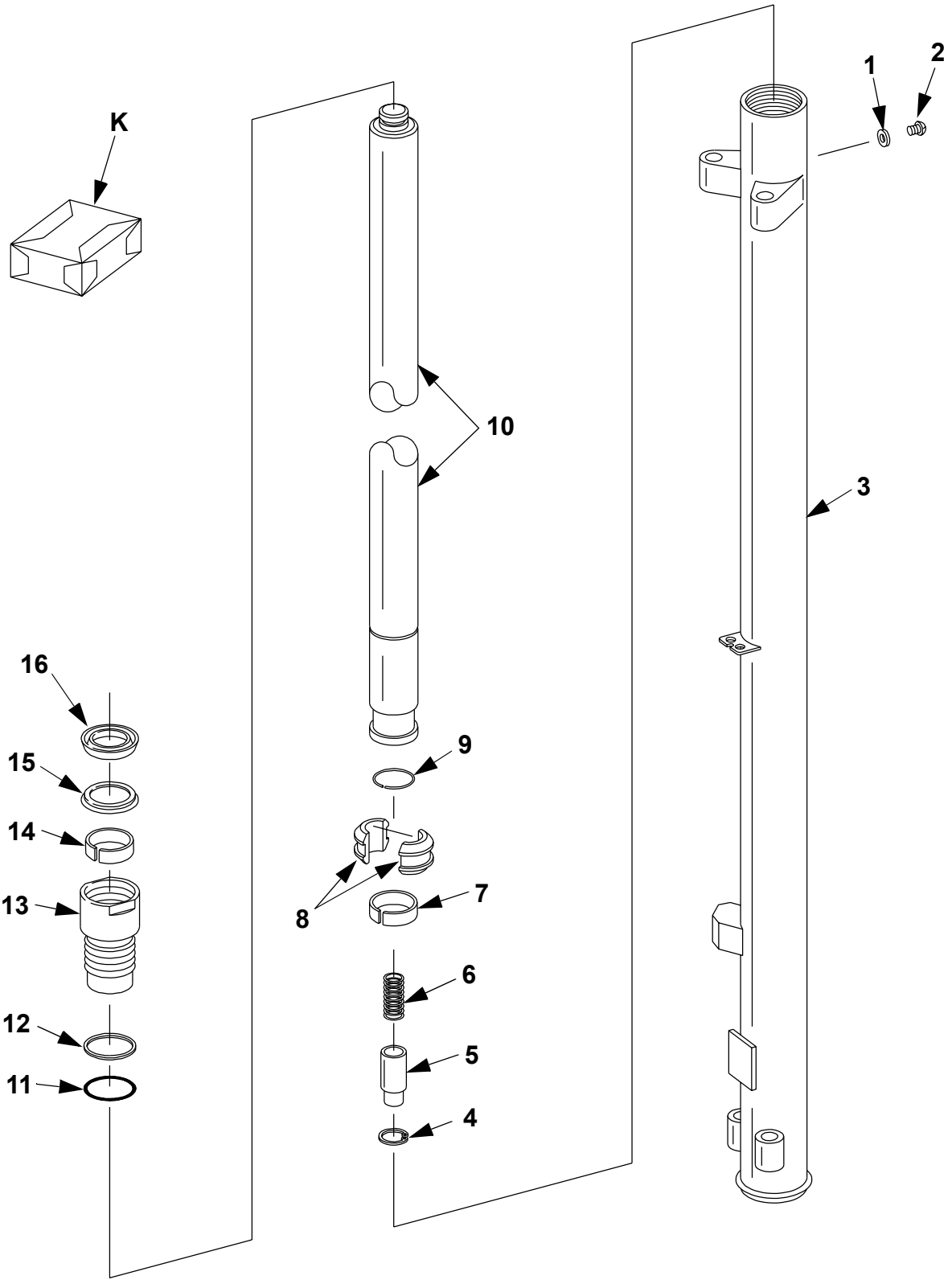

© BT Prime-Mover, Inc.

Return

6610-100 Two stage mast lift cylinder

ITEM #	PART #	NAME	# FOR ASSY.	UNITS
*	305088-000	Cylinder assembly, **71/100**	1	**71/100**
*	305088-001	Cylinder assembly, **83/124**	1	**83/124**
*	305088-002	Cylinder assembly, **95/150**	1	**95/150**
1	11897-03	Washer, seal	1	
2	49548-00	Screw	1	
3	305089-000	Tube cylinder, **71/100**	1	**71/100**
3	305089-001	Tube cylinder, **83/124**	1	**83/124**
3	305089-002	Tube cylinder, **95/150**	1	**95/150**
4	11827-20	Ring, retainer	1	
5	304106-000	Plunger assembly	1	
6	29635-00	Spring	1	
7K	NSS	Ring, guide	1	
8	304112-000	Piston	2	
9	23075-02	Ring, retainer	1	
10	305090-000	Rod cylinder, **71/100**	1	**71/100**
10	305090-001	Rod cylinder, **83/124**	1	**83/124**
10	305090-002	Rod cylinder, **95/150**	1	**95/150**
11K	NSS	O ring	1	
12K	NSS	Ring, backup	1	
13	305093-000	Bearing	1	
14K	NSS	Ring, guide	1	
15K	NSS	Seal	1	
16K	NSS	Wiper	1	
K	311418-000	Kit, seal (Contains Items Marked With “K”)	1	

© BT Prime-Mover, Inc.

6610-200

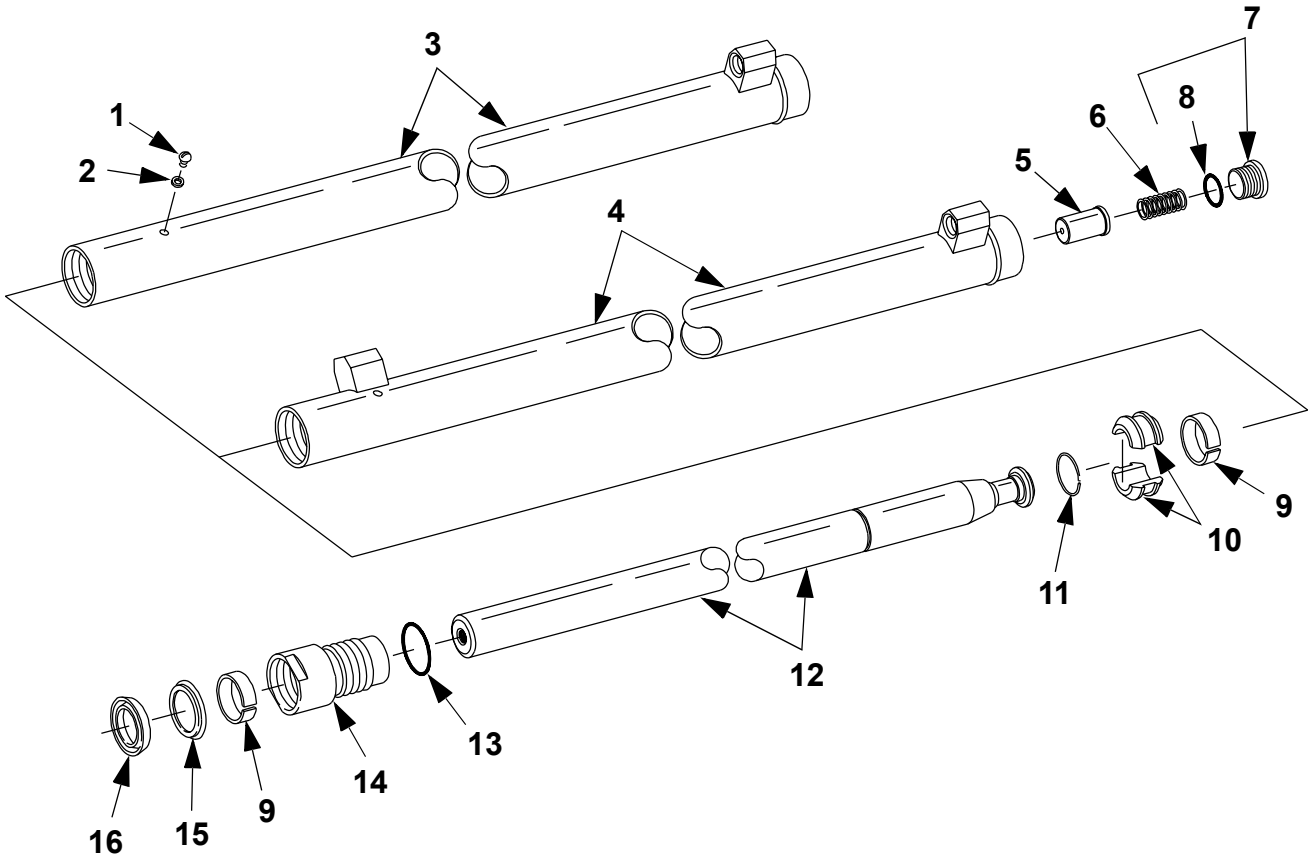

© BT Prime-Mover, Inc.

Return

6610-200 Three stage mast staging cylinder

ITEM #	PART #	NAME	# FOR ASSY.	UNITS
*	**See Chart**	Cylinder assembly, **1 port**	1	**1 port**
**	**See Chart**	Cylinder assembly, **2 ports**	1	**2 ports**
1	49548-00	Screw	1	
2	11897-03	Washer, seal	1	
3	**See Chart**	Tube cylinder, **1 port**	1	**1 port**
4	**See Chart**	Tube cylinder, **2 ports**	1	**2 ports**
5	29830-00	Plunger assembly	1	
6	29635-00	Spring	1	
7	49274-10	Plug	2	
8	12391-10	O ring	2	
9K	NSS	Ring, wear	1	
10	29634-00	Piston	1	
11	27892-00	Ring, retainer	1	
12	**See Chart**	Rod, cylinder	1	
13	11015-39	O ring	1	
14	29630-00	Bearing	1	
15K	NSS	Seal, rod	1	
16K	NSS	Wiper	1	
K	311416-000	Kit, seal (Contains Items Marked With “K”)	1	

Three Stage Mast Staging cylinder

	Cylinder assy. 1 Port	Tube assy. 1 Port	Cylinder assy. 2 Ports	Tube assy. 2 Ports	Rod cylinder
Mast height	**Item # ***	**Item # 3**	**Item # ****	**Item # 4**	**Item # 12**
71/150	304100-015	304263-015	304100-014	304263-014	304101-007
83/180	304100-017	304263-001	304100-016	304263-000	304101-008
87/189	304100-019	304263-003	304100-018	304263-002	304101-009

© BT Prime-Mover, Inc.

6620-200

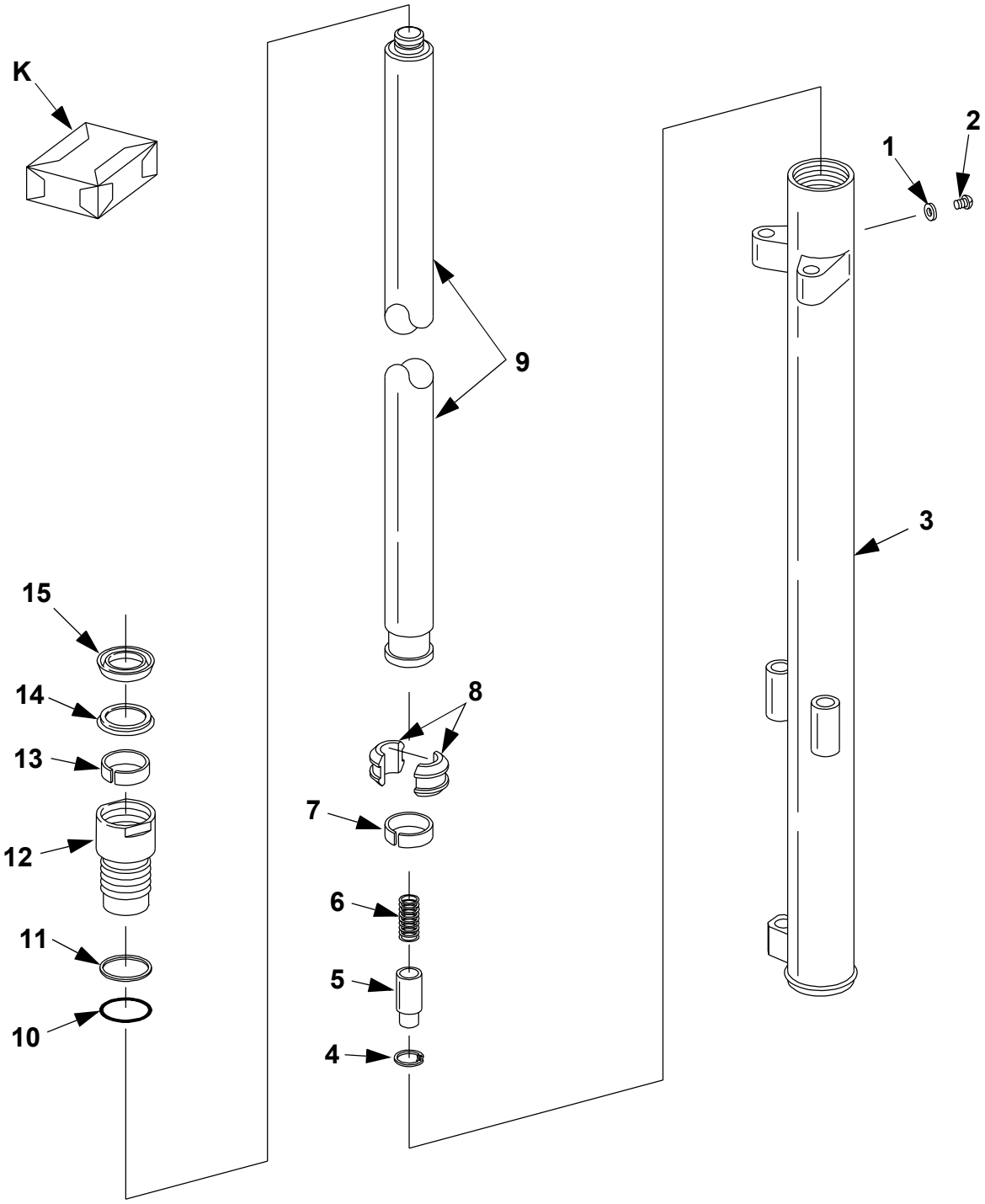

© BT Prime-Mover, Inc.

Return

6620-200 Three stage mast freelift cylinder

ITEM #	PART #	NAME	# FOR ASSY.	UNITS
*	304105-000	Cylinder assembly, **71/150**	1	**71/150**
*	304105-001	Cylinder assembly, **83/180**	1	**83/180**
*	304105-002	Cylinder assembly, **87/189**	1	**87/189**
1	11897-03	Washer, seal	1	
2	49548-00	Screw	1	
3	304108-000	Tube cylinder, **71/150**	1	**71/150**
3	304108-001	Tube cylinder, **83/180**	1	**83/180**
3	304108-002	Tube cylinder, **87/189**	1	**87/189**
4	11827-20	Ring, retainer	1	
5	304106-000	Plunger assembly	1	
6	29635-00	Spring	1	
7K	NSS	Ring, guide	1	
8	304112-000	Piston	2	
9	304111-000	Rod cylinder, **71/150**	1	**71/150**
9	304111-001	Rod cylinder, **83/180**	1	**83/180**
9	304111-002	Rod cylinder, **87/189**	1	**87/189**
10K	NSS	O ring	1	
11K	NSS	Ring, backup	1	
12	28142-00	Bearing	1	
13K	NSS	Ring, guide	1	
14K	NSS	Seal	1	
15K	NSS	Wiper	1	
K	311418-000	Kit, seal (Contains Items Marked With “K”)	1	

© BT Prime-Mover, Inc.

6650-002

Serial Number
29060001 - UP

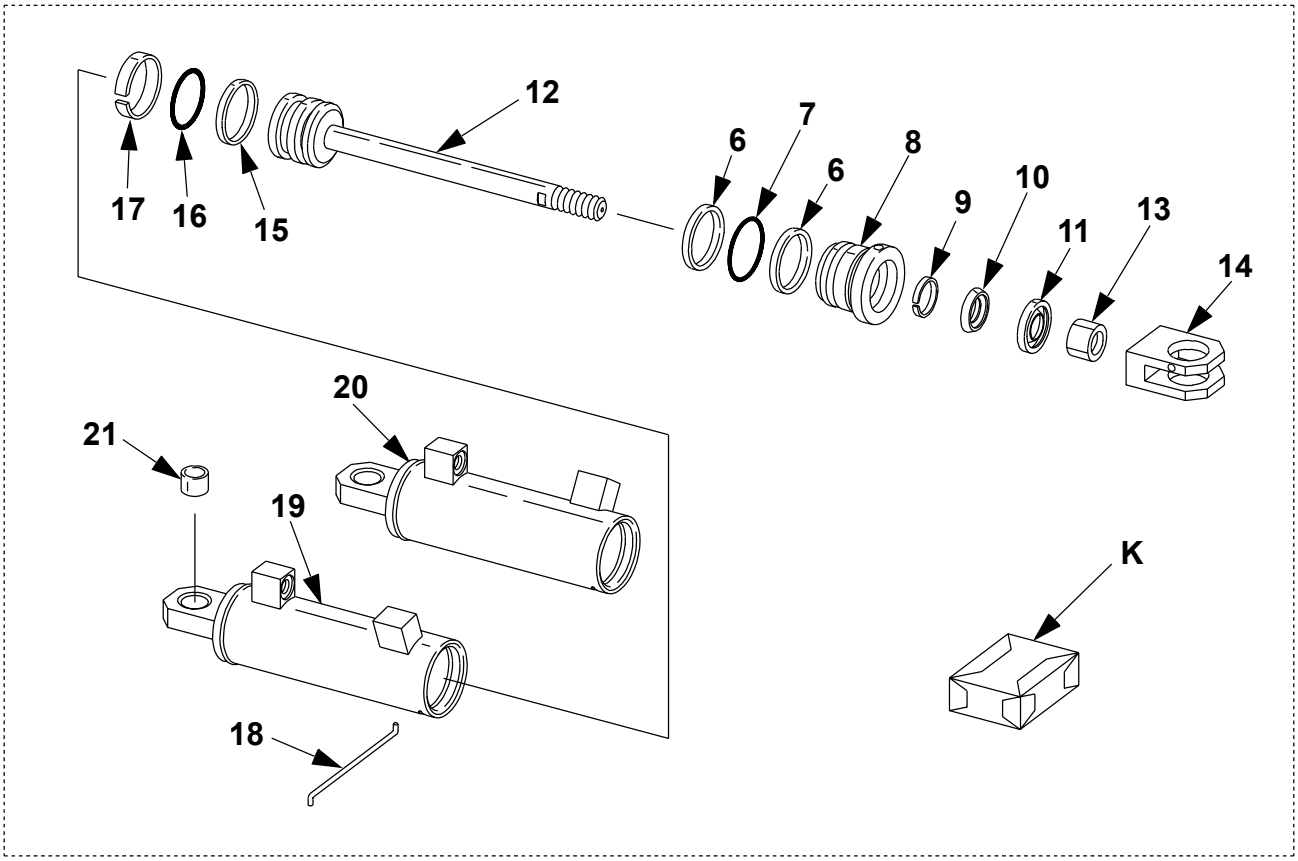

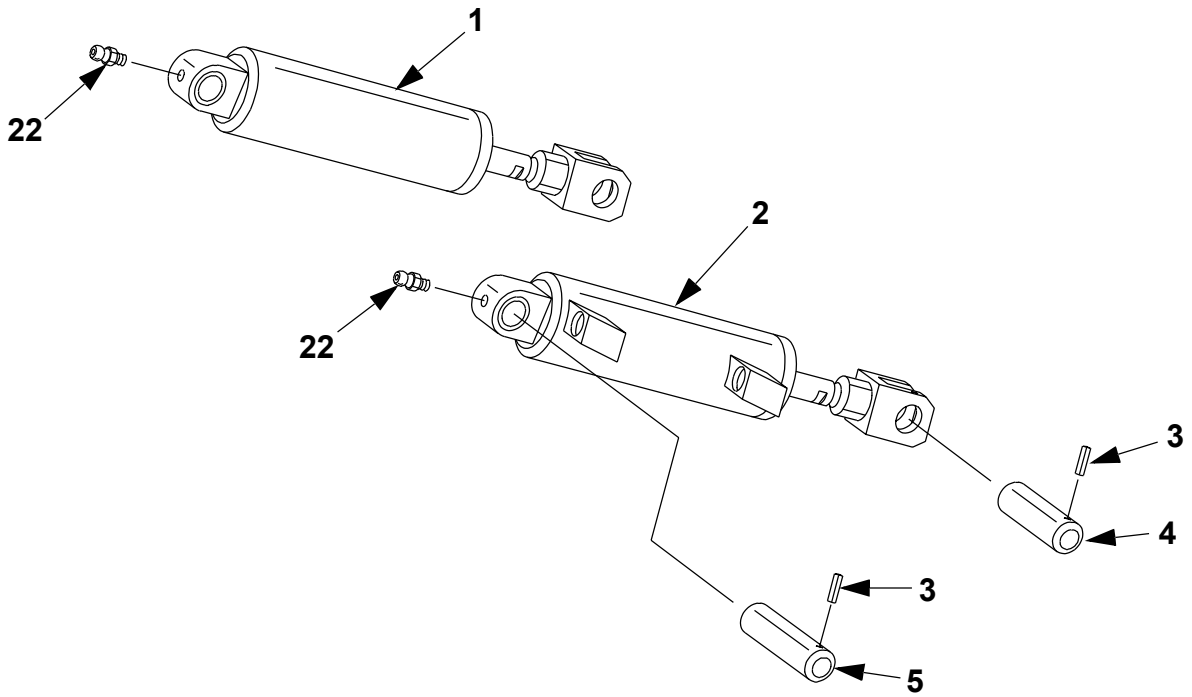

© BT Prime-Mover, Inc.

Return

6650-002 Reach cylinder assembly Serial Number 29060001 - UP

ITEM #	PART #	NAME	# FOR ASSY.	UNITS
1	309777-000	Reach cylinder assembly, **Right**	1	**Right**
2	309777-001	Reach cylinder assembly, **Left**	1	**Left**
3	20174	Pin, roll	4	
4	300935-000	Pin, clevis	2	
5	300935-001	Pin, clevis	2	
6K	NSS	Ring, backup	2	
7K	NSS	O ring	1	
8	300654-000	Bearing	1	
9K	NSS	Ring, Guide	1	
10K	NSS	Seal	1	
11K	NSS	Wiper	1	
12	308057-000	Rod cylinder	1	
13	302773-016	Nut	1	
14	300938-000	Clevis	1	
15K	NSS	Ring, backup	1	
16K	NSS	O ring	1	
17K	NSS	Ring, guide	1	
18K	NSS	Retainer	1	
19	309780-000	Tube cylinder, **Right**	1	**Right**
20	309780-001	Tube cylinder, **Left**	1	**Left**
21	308515-000	Bearing, spherical	1	
22	11160-11	Fitting, grease	2	
K	308058-000	Kit, seal (Contains Items Marked with “K”)	1	

© BT Prime-Mover, Inc.

6660-001

Serial Number
28257001 - UP

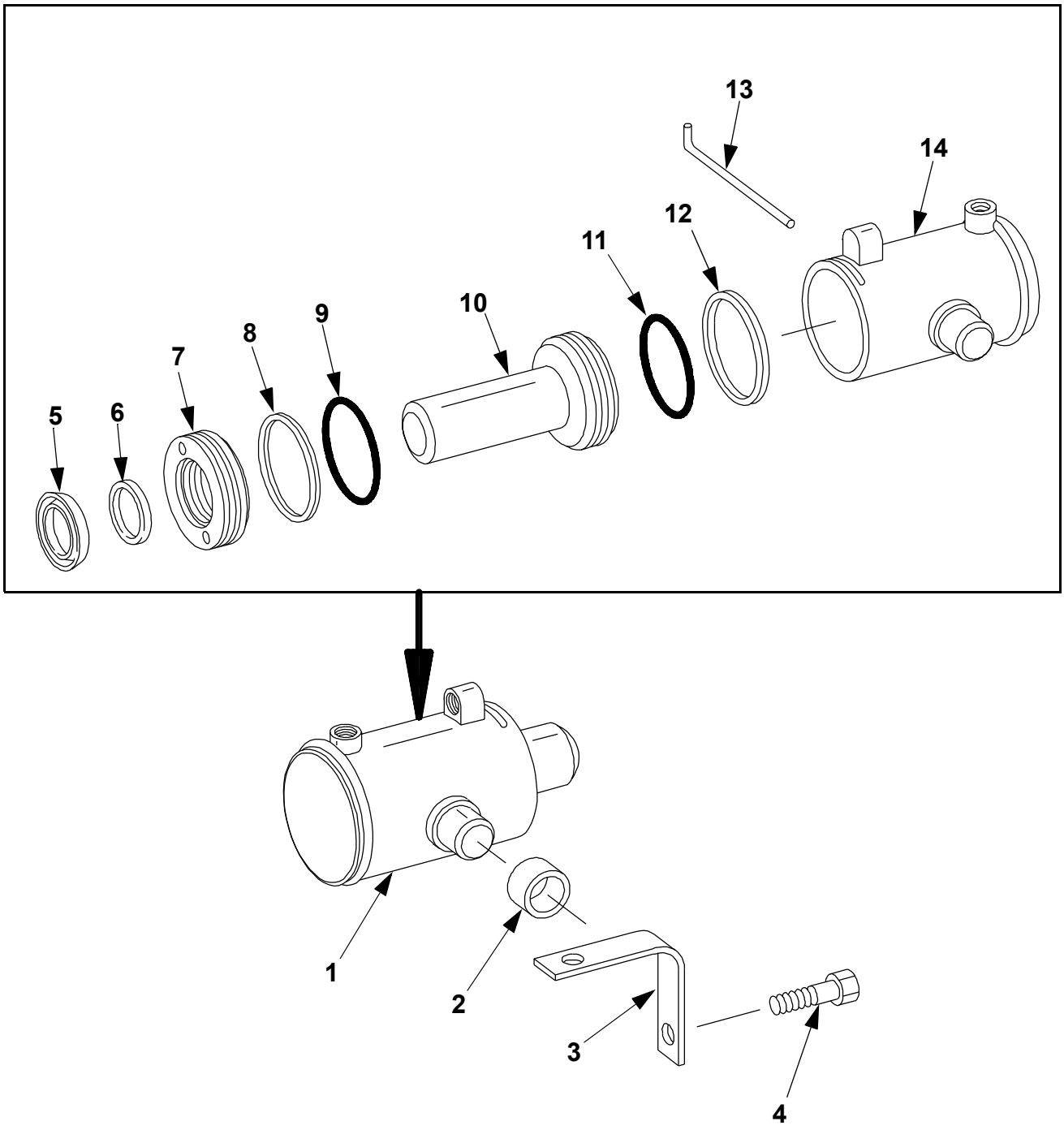

© BT Prime-Mover, Inc.

Return

6660-001 Tilt Cylinder assembly Serial Number 28257001 - UP

ITEM #	PART #	NAME	# FOR ASSY.	UNITS
1	308360-000	Tilt Cylinder Assembly	1	
2	49929-11	Bushing	2	
3	300891-000	Retainer, cylinder	2	
4	301951-016	Screw, cap	4	
5K	NSS	Wiper	1	
6K	NSS	Seal	1	
7	308359-000	Bearing, cylinder	1	
8K	NSS	Ring, back-up	1	
9K	NSS	O Ring	1	
10	300897-000	Rod, cylinder	1	
11K	NSS	O Ring	1	
12K	NSS	Ring, back-up	1	
13K	NSS	Retainer	1	
14	300893-000	Tube, cylinder	1	
K	308361-000	Kit, seal (Contains Items Marked with “K”)	1	

© BT Prime-Mover, Inc.

This page intentionally left blank

© BT Prime-Mover Inc.

Return

7000
Operating Function - Lifting Device

© BT Prime-Mover Inc.

Return

7110-000

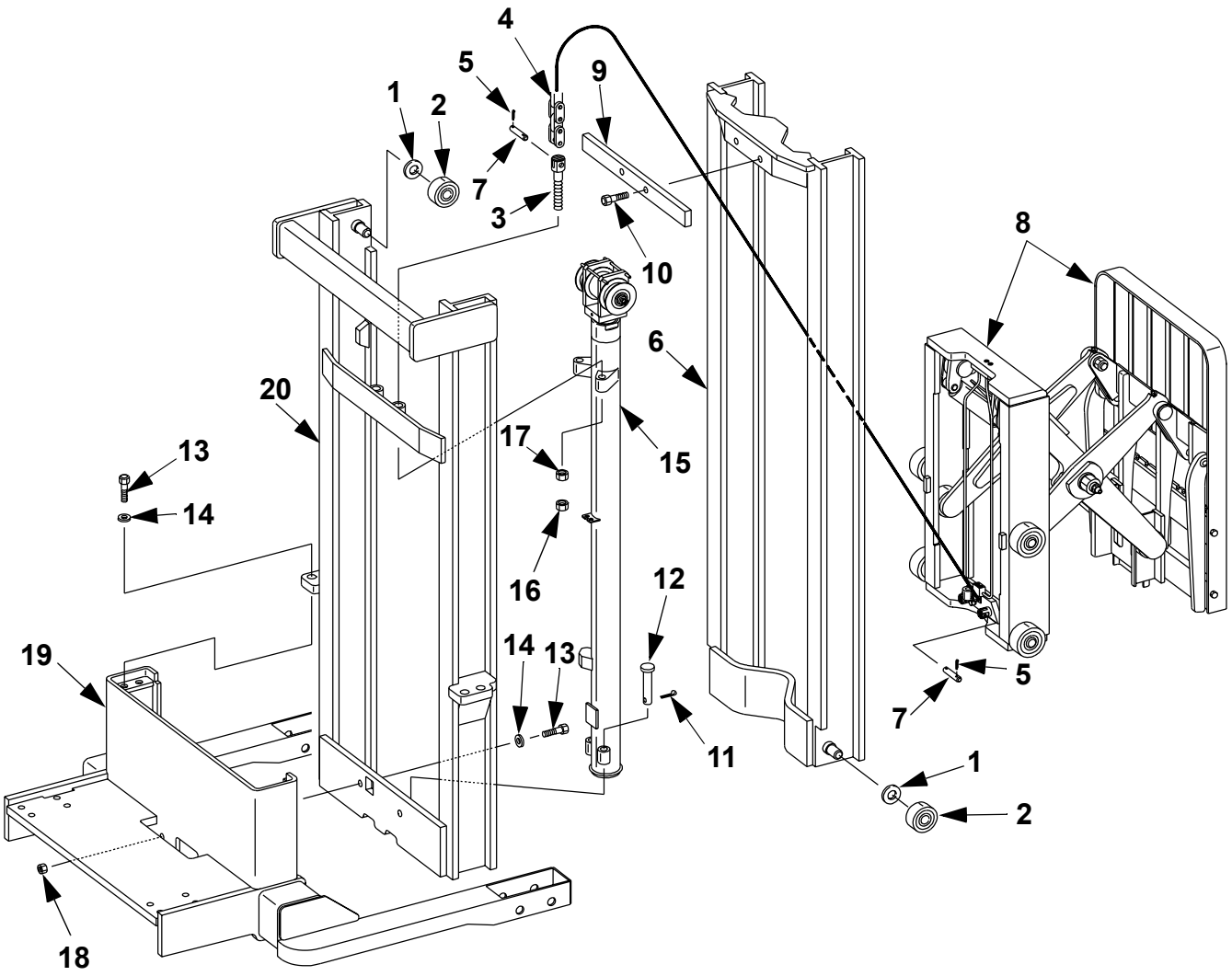

© BT Prime-Mover, Inc.

7110-000 Two stage mast

ITEM #	PART #	NAME	# FOR ASSY.	UNITS
1	11857-05	Shim, **0.05 in. [1.27 mm]**	As Req'd.	
1	11857-09	Shim, **0.08 in. [2.03 mm]**	As Req'd.	
2	21089-02	Bearing	4	
3	304359-000	Anchor, chain	2	
4	14835-38	Chain, lift **71/100**	2	**71/100**
4	14835-11	Chain, lift **83/124**	2	**83/124**
4	14835-28	Chain, lift **95/150**	2	**95/150**
5	11157-03	Pin, cotter	8	
6	305081-000	Column, Inner **71/100**	1	**71/100**
6	305081-001	Column, Inner **83/124**	1	**83/124**
6	305081-002	Column, Inner **95/150**	1	**95/150**
7	30554-00	Pin, chain	4	
8	----------	Reach assembly (See Fig.# 7241-002)	1	
9	305946-001	Bar, down stop	1	
10	301957-030	Screw, cap	2	
11	11133-05	Pin, cotter	2	
12	300758-001	Pin, cylinder anchor	2	
13	301958-060	Screw, cap	6	
14	50000-19	Washer, flat	6	
15	----------	Cylinder lifting gear (See Fig.# 7170-000)	1	
16	303716-020	Nut, jam	2	
17	304358-020	Nut	2	
18	301960-020	Nut	2	
19	----------	Frame, straddle **(State Model & Serial Number)**	1	
20	305495-000	Column, Outer **71/100**	1	**71/100**
20	305495-001	Column, Outer **83/124**	1	**83/124**
20	305495-002	Column, Outer **95/150**	1	**95/150**

© BT Prime-Mover, Inc.

7110-100

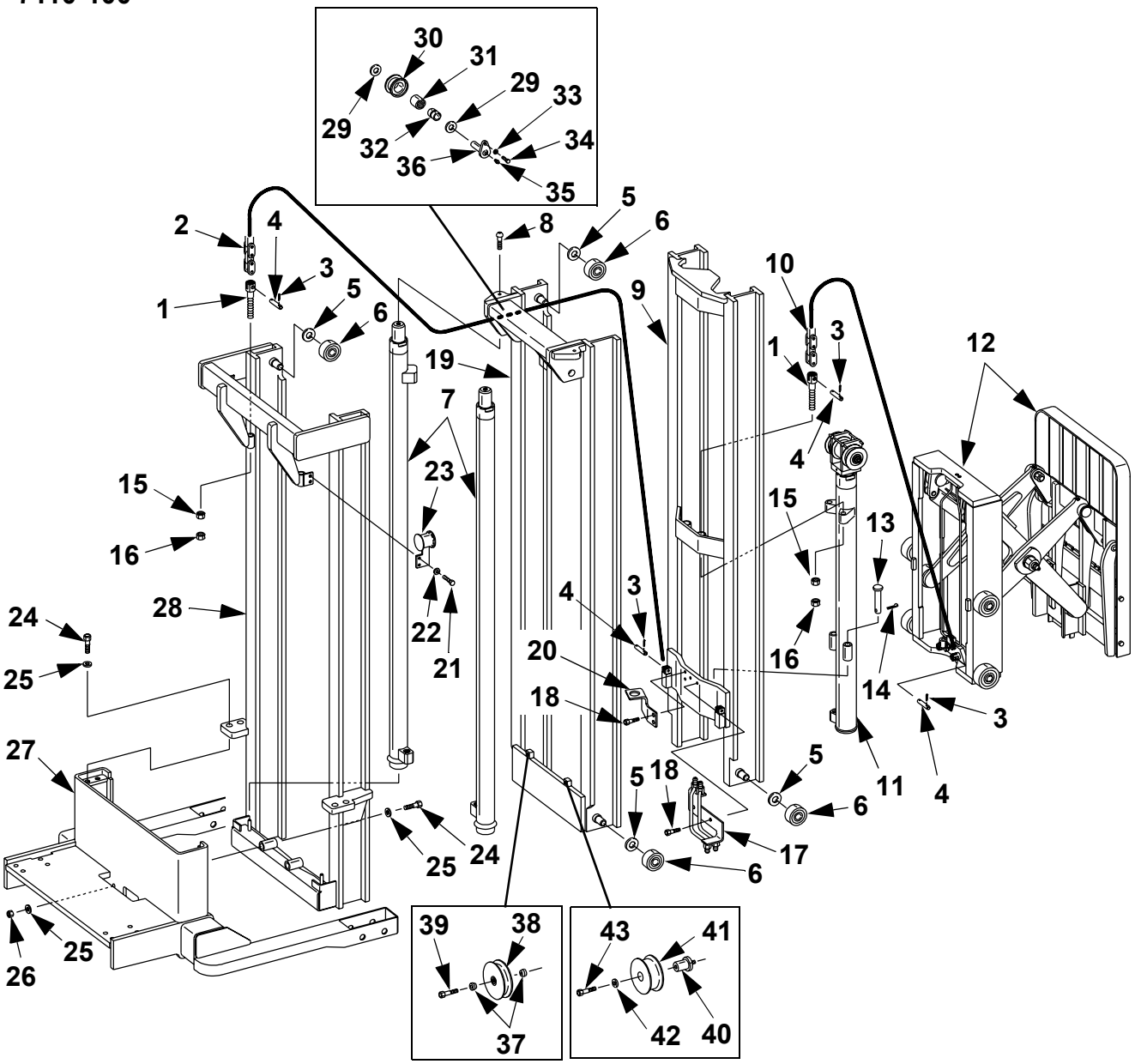

Three Stage Mast					
	Staging Lift Chain	**Column inner**	**Free Lift Chain**	**Column Intermediate**	**Column outer**
Mast height	**Item # 2**	**Item # 9**	**Item # 10**	**Item # 19**	**Item # 28**
71/150	14835-08	303908-000	14835-83	303923-000	303974-000
83/180	14835-10	303908-001	14835-84	303923-001	303974-001
87/189	14835-70	303908-002	14835-85	303923-002	303974-002

© BT Prime-Mover, Inc.

7110-100 Three stage mast

ITEM #	PART #	NAME	# FOR ASSY.	UNITS
1	304359-000	Anchor, chain	4	
2	**See Chart**	Chain, Staging lift	2	
3	11157-03	Pin, cotter	16	
4	30554-00	Pin, chain	8	
5	11857-05	Shim, **0.05 in. [1.27 mm]**	As Req'd.	
5	11857-09	Shim, **0.08 in. [2.03 mm]**	As Req'd.	
6	21089-02	Bearing	8	
7	----------	Staging cylinder assembly (See Fig.# 6610-200)	2	
8	302772-040	Screw, button head	2	
9	**See Chart**	Column, inner	1	
10	**See Chart**	Chain, Free lift	2	
11	----------	Cylinder lifting gear (See Fig.# 7170-000)	1	
12	----------	Reach assembly (See Fig.# 7241-002)	1	
13	300758-000	Pin, anchor	2	
14	11133-05	Pin, cotter	2	
15	304358-020	Nut	4	
16	303716-020	Nut, jam	4	
17	305567-000	Line, hydraulic	1	
18	301652-016	Screw, cap	4	
19	**See Chart**	Column, Intermediate	1	
20	305522-000	Bracket	1	
21	50003-01	Screw, cap	2	
22	50001-11	Lockwasher	2	
23	305535-000	Sheave	1	
24	301958-060	Screw, cap	6	
25	50000-19	Washer, flat	8	
26	301960-020	Nut	2	
27	----------	Frame, straddle **(State Model & Serial Number)**	1	
28	**See Chart**	Column, outer	1	
29	29609-00	Washer, shim	4	
30	29624-00	Sheave, chain	2	
31	49994-03	Bearing, roller	2	
32	49993-07	Race, inner	2	
33	50001-11	Lockwasher	2	
34	50003-01	Screw, cap	2	
35	11160-11	Fitting, grease	2	
36	29637-00	Shaft	2	
37	26617-03	Spacer	2	
38	301837-000	Sheave, hose	1	
39	301957-060	Screw, cap	1	
40	304610-000	Shaft, sheave	1	
41	305148-000	Sheave, hydraulic, and electrical	1	
42	14935-01	Washer, flat	1	
43	301652-016	Screw, cap	1	

© BT Prime-Mover, Inc.

7170-000

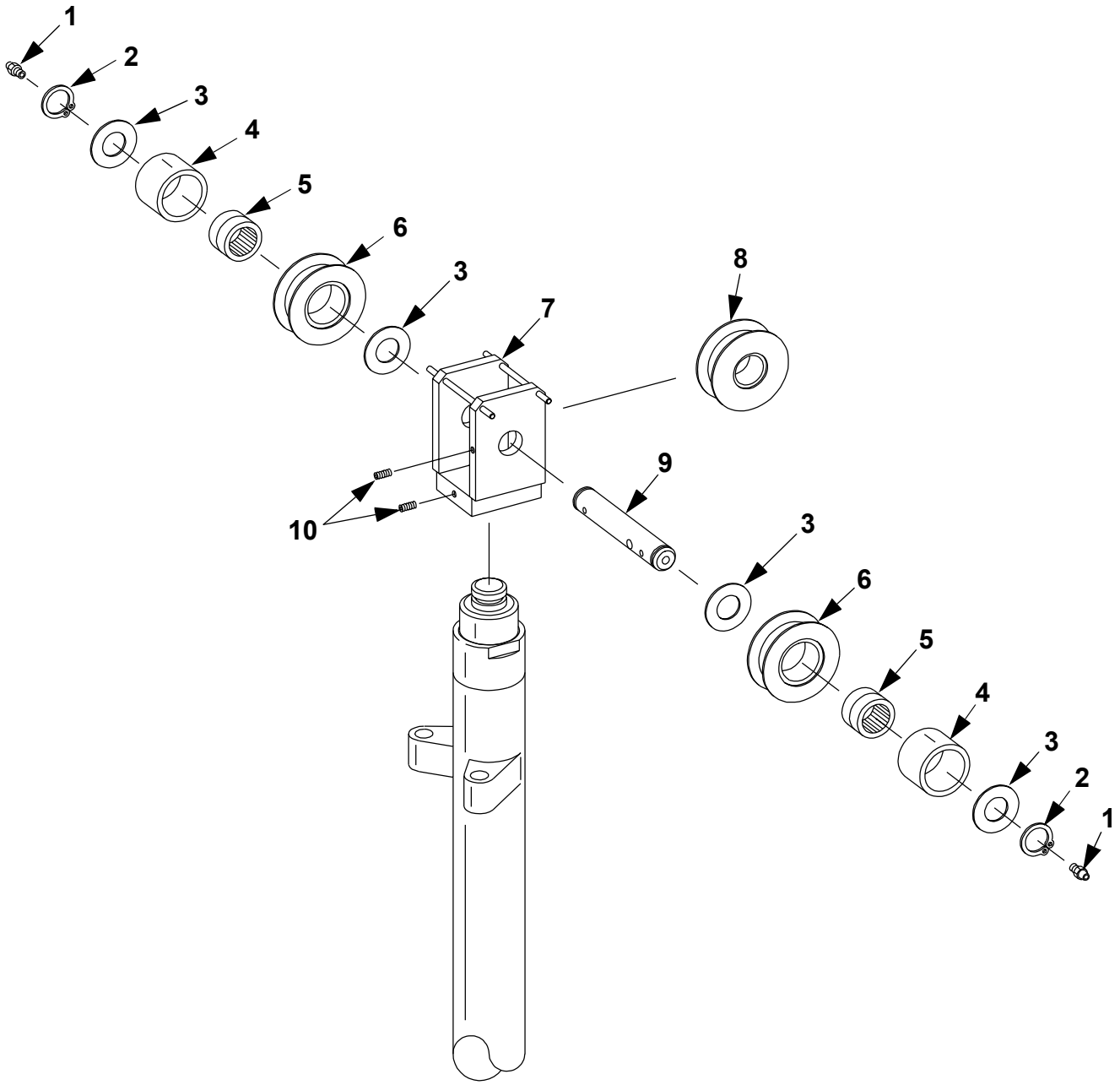

© BT Prime-Mover, Inc.

Return

7170-000 Two / Three stage mast lifting gear

ITEM #	PART #	NAME	# FOR ASSY.	UNITS
1	11160-11	Fitting, grease	2	
2	304983-000	Ring, retainer	2	
3	304357-000	Shim, **0.063 in. [1.58 mm]**	4	
4	49993-07	Race	2	
5	49994-03	Bearing, roller	2	
6	29624-00	Sheave, chain	2	
7	304118-000	Head, sheave	1	
8	305148-000	Sheave, hydraulic and electrical	1	
9	304117-000	Shaft	1	
9	307612-000	Shaft **(Cold Storage)**	1	**Cold Storage**
10	301740-001	Screw, set	2	

© BT Prime-Mover, Inc.

7210-001

Serial Number
28077002 - UP

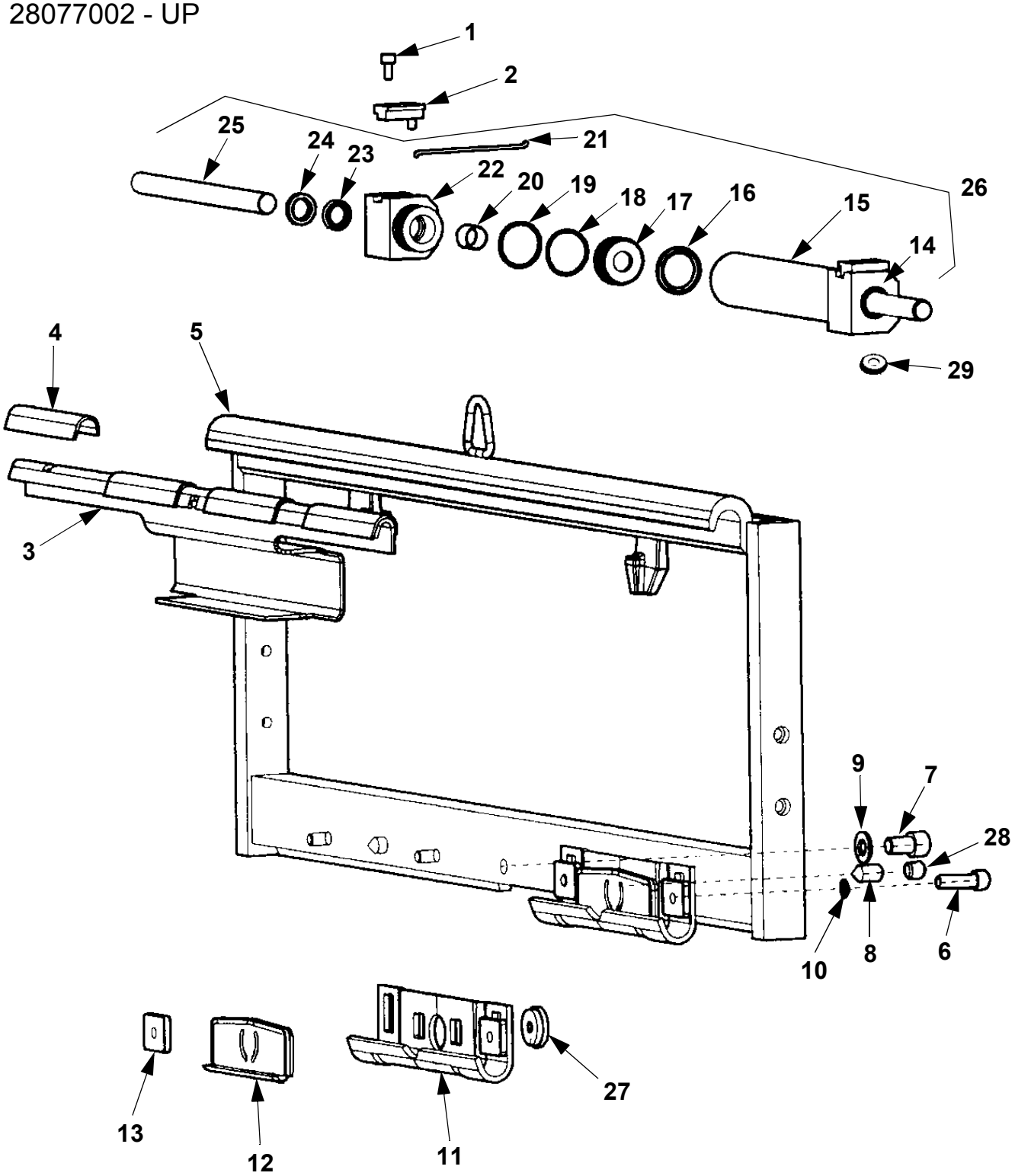

© BT Prime-Mover, Inc.

7210-001 Sideshifter assembly Serial Number 28077002 - UP

ITEM #	PART #	NAME	# FOR ASSY.	UNITS
*	307969-000	Sideshifter assembly, **4 in. [101.6 mm] Stroke**	1	**4 in. Stroke**
*	307969-001	Sideshifter assembly, **6 in. [152.4 mm] Stroke**	1	**6 in. Stroke**
1	308275-000	Screw	4	
2	308276-000	Bracket	2	
3	308277-000	Support	1	
4	308278-000	Pad, upper	4	
5	NA	Frame, sideshifter	1	
6	308279-000	Bolt, lower hook	4	
7	308280-000	Bolt, stop	1	
8	308281-000	Screw, lower hook set	2	
9	308282-000	Washer, stop bolt	1	
10	308283-000	Washer, lower hook	4	
11	308284-000	Hook, lower	2	
12	308285-000	Pad, lower	2	
13	308286-000	Plate, lower hook	4	
14	308287-000	Cap, right	1	
15	308288-000	Body, cylinder	1	
16K	NSS	Seal	1	
17	308289-000	Piston, **4 in. [101.6 mm] Center Stroke**	1	**4 in. Stroke**
17	308289-001	Piston, **6 in. [152.4 mm] Center Stroke**	1	**6 in. Stroke**
18K	NSS	O ring	2	
19K	NSS	Ring	2	
20	308290-000	Bushing	2	
21	308291-000	Ring, cylinder cap	2	
22	308292-000	Cap, left cylinder	1	
23K	NSS	Seal	2	
24K	NSS	Sael	2	
25	308293-000	Rod, **4 in. [101.6 mm] Center Stroke**	2	**4 in. Stroke**
25	308293-001	Rod, **6 in. [152.4 mm] Center Stroke**	2	**6 in. Stroke**
26	308294-000	Cylinder, **4 in. [101.6 mm] Center Stroke**	1	**4 in. Stroke**
26	308294-001	Cylinder, **6 in. [152.4 mm] Center Stroke**	1	**6 in. Stroke**
27	308295-000	Washer	2	
28	308296-000	Screw	2	
29	308297-000	Restrictor, flow	2	
K	308298-000	Kit, seal (Containes items marked with “K”)	1	

© BT Prime-Mover, Inc.

7241-003

Serial Number
29125001 - UP

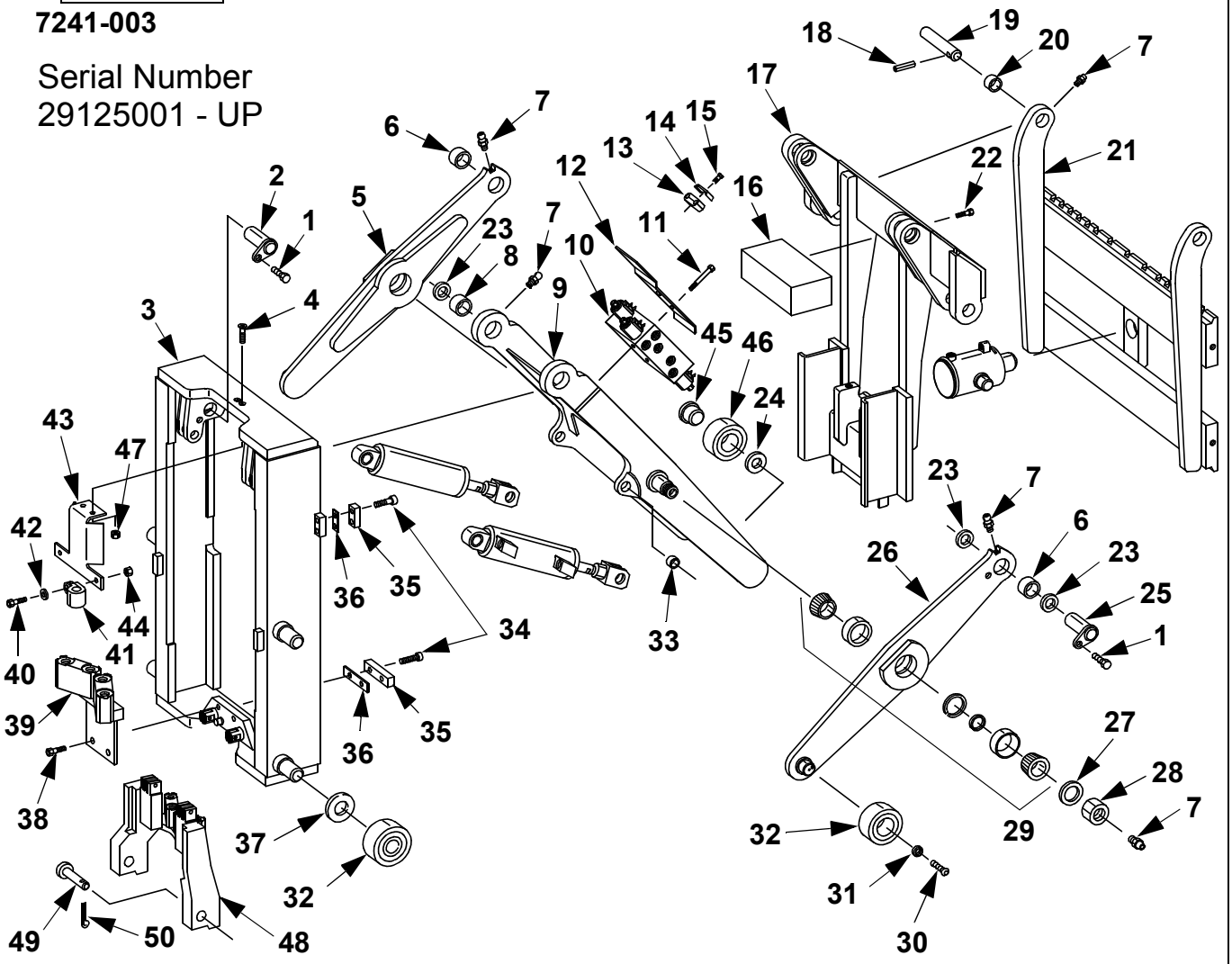

ITEM #	PART #	NAME	# FOR ASSY.	UNITS
1	20420	Screw, cap	4	
2	308039-000	Pin	4	
3	308261-000	Frame, rear **(2 Stage)**	1	2 Stage
3	308042-000	Frame, rear **(3 Stage)**	1	3 Stage
4	24600	Screw, flat head	2	
5	306678-000	Arm, left	1	
6	49929-13	Bushing	2	
7	11160-11	Fitting, grease	8	
8	49929-04	Bushing	2	
9	308262-000	Arm, inner **(2 Stage)**	1	2 Stage
9	308236-000	Arm, inner **(3 Stage)**	1	3 Stage
10	----------	Control valve NO sideshifter (See Fig.# 6220-002)	1	
10	----------	Control valve with sideshifter (See Fig.# 6220-102)	1	
11	21424	Screw, lock	2	
12	306861-000	Cover, valve	1	

© BT Prime-Mover, Inc.

7241-003 Reach assembly Serial Number 29125001 - UP

ITEM #	PART #	NAME	# FOR ASSY.	UNITS
13	306050-000	Clamp, poly	2	
14	306258-000	Cover	4	
15	24488	Screw	2	
16	308263-000	Manifold	1	
17	308263-000	Frame, forward **(2 Stage)**	1	2 Stage
17	308232-000	Frame, forward **(3 Stage)**	1	3 Stage
18	11073-17	Pin, roll	2	
19	308240-001	Pin **(2 Stage)**	2	2 Stage
19	308240-000	Pin **(3 Stage)**	2	3 Stage
20	49929-09	Bushing	2	
21	308041-000	Bar, fork	1	
22	301652-016	Screw, cap	2	
23	307009-000	Washer, thick 0.117 inch [2.98 mm]	As Req'd.	
23	307009-001	Washer, thin 0.094 in. [2.41 mm]	As Req'd.	
23	307009-002	Washer, 0.030 inch [0.76 mm]	As Req'd.	
24	300889-000	Washer	2	
25	308039-000	Pin	2	
26	306678-001	Arm, right	1	
27	303717-030	Washer, flat	2	
28	303716-030	Nut, jam	2	
29	303707-000	Set, bearing	2	
30	301922-020	Screw, flat head lock	2	
31	301347-000	Cap	2	
32	49832-00	Bearing	6	
33	49929-05	Bushing	2	
34	11047-18	Screw, socket head	6	
35	49563-00	Bumper	3	
36	21837-00	Shim, **0.1196 in. [3.03 mm]**	As Req'd.	
36	21837-01	Shim, **0.060 in. [1.52 mm]**	As Req'd.	
37	11857-10	Shim, **0.05 in. [1.27 mm]**	As Req'd.	
37	11857-11	Shim, **0.025 in. [0.635 mm]**	As Req'd.	
38	11854-03	Screw, cap **(3 Stage)**	2	3 Stage
39	306166-000	Manifold **(3 Stage)**	1	3 Stage
40	301652-016	Screw	2	
41	15677-02	Clamp	2	
42	50000-13	Washer, flat	2	
43	306169-000	Bracket	1	
44	302773-008	Nut	2	
45	307015-000	Cap, bearing	2	
46	21089-01	Bearing	2	
47	301960-008	Nut	2	
48	306096-000	Anchor, chain **(2 Stage)**	1	2 Stage
49	11135-07	Pin, yoke **(2 Stage)**	2	2 Stage
50	11133-05	Pin, cotter **(2 Stage)**	2	2 Stage

© BT Prime-Mover, Inc.

7410-001

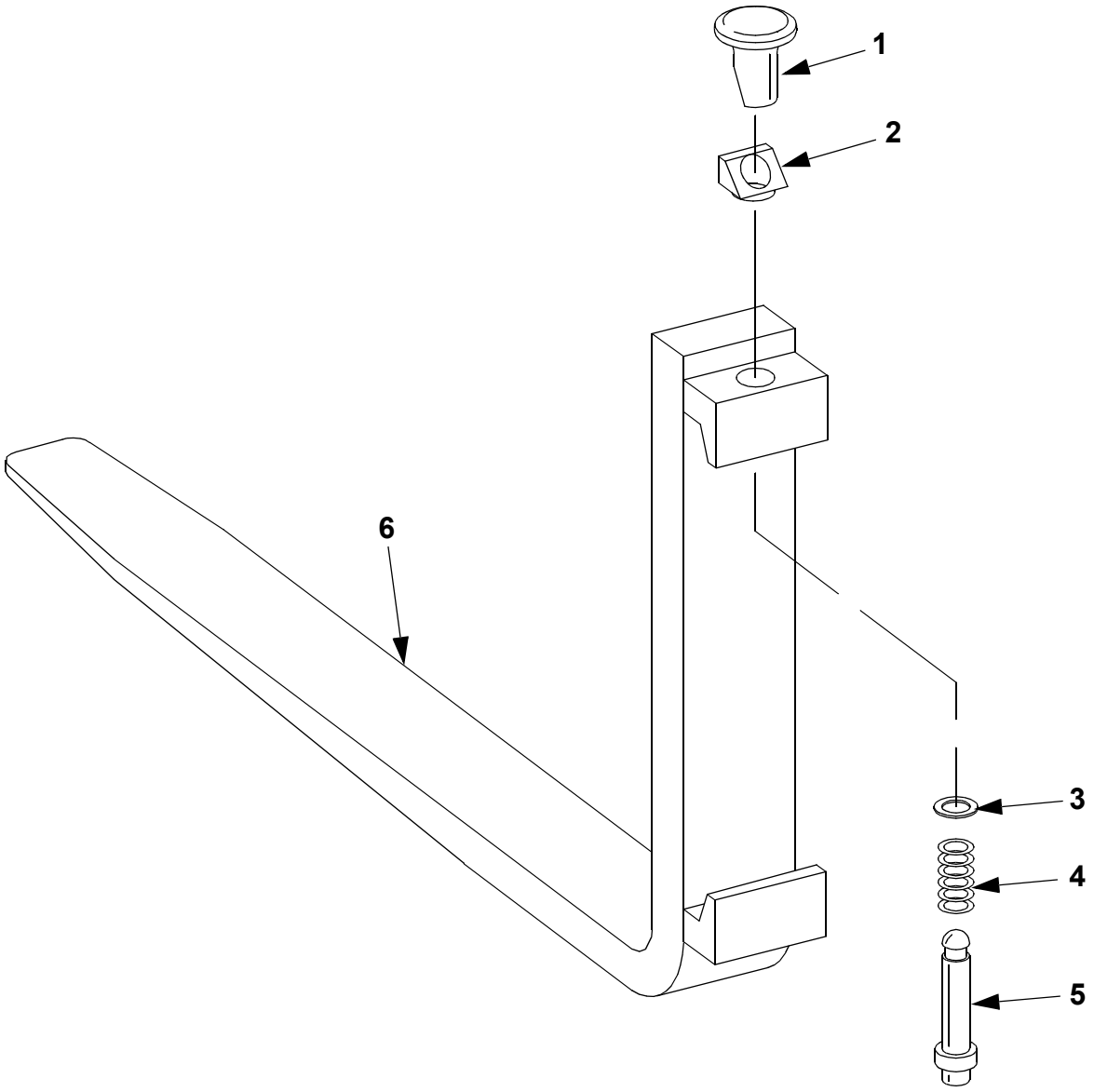

© BT Prime-Mover Inc.

Return

7410-001 Fork assembly

ITEM #	PART #	NAME	# FOR ASSY.	UNITS
		3000 Lb [1360 kg]		
		This fork assembly is 1.50 in. [38.1 mm] thick		
*	21372-00	Fork assembly, **30 inch [762 mm]**	2	
*	21372-01	Fork assembly, **36 inch [914 mm]**	2	
*	21372-02	Fork assembly, **42 inch [1066 mm]**	2	
*	21372-03	Fork assembly, **48 inch [1219 mm]**	2	
		4000 Lb [1814 kg]		
		This fork assembly is 1.75 in. [44.45 mm] thick		
*	25008-01	Fork assembly, **30 inch [762 mm]**	2	
*	25008-02	Fork assembly, **36 inch [914 mm]**	2	
*	25008-03	Fork assembly, **42 inch [1066 mm]**	2	
*	25008-04	Fork assembly, **48 inch [1219 mm]**	2	
1K	NSS	Knob	1	
2K	NSS	Wedge	1	
3K	NSS	Washer	1	
4K	NSS	Spring	1	
5K	NSS	Pin	1	
6	NA	Fork	1	
K	311115-000	Kit, knob (Contains Items Marked with “K”)	1	

© BT Prime-Mover Inc.

This page intentionally left blank

© BT Prime-Mover Inc.

Return

8000
Peripheral / Installation Equipment

© BT Prime-Mover Inc.

Return

This page intentionally left blank

© BT Prime-Mover Inc.

Return

9000
Options / Attachments

© BT Prime-Mover Inc.

Return

9370-001

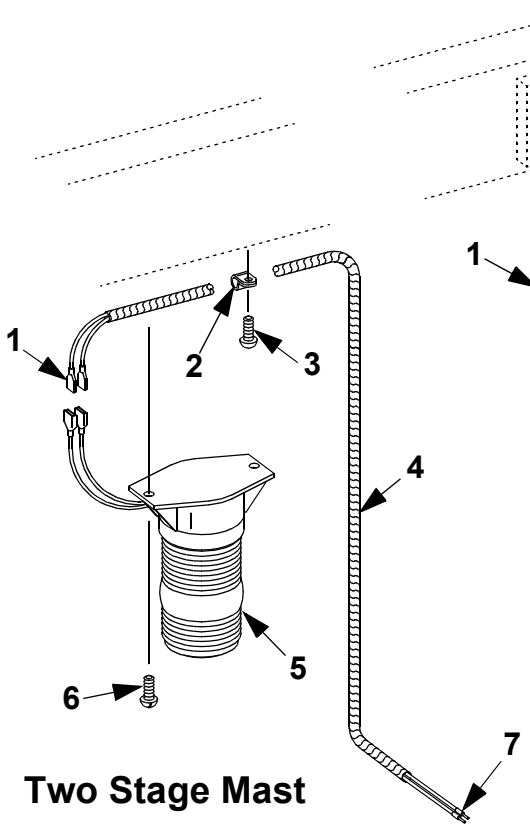

Two Stage Mast

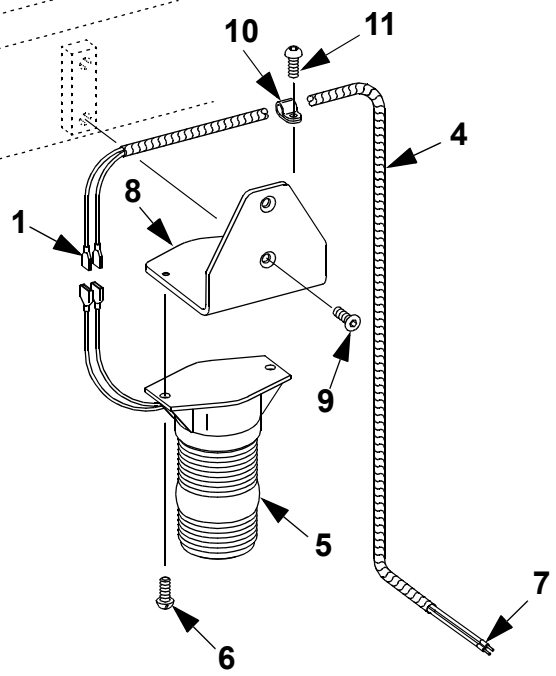

Two Stage Mast

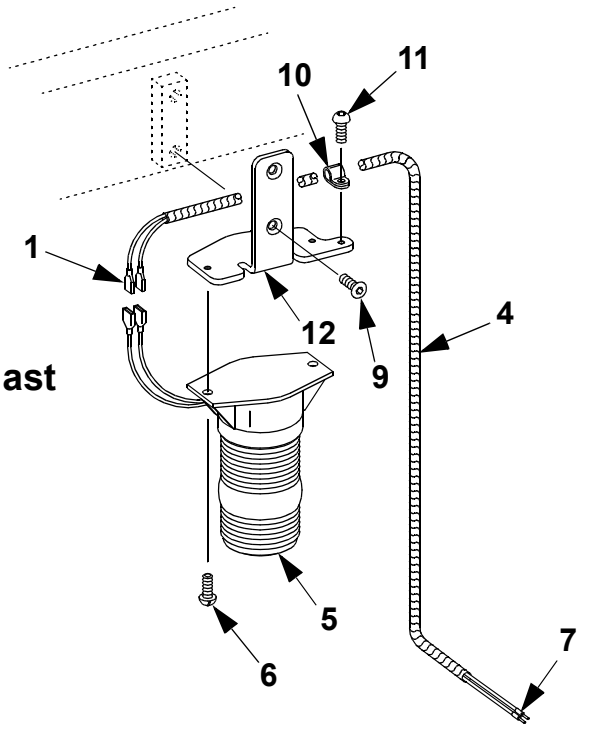

Three Stage Mast

© BT Prime-Mover, Inc.

Return

9370-001 Warning lights / alarm

ITEM #	PART #	NAME	# FOR ASSY.	UNITS
1	49771-00	Fitting, female receptacle wire	2	
2	15677-07	Clamp	2	
3	11176-11	Screw, slotted	2	
4	52-07907-00	Cable, 14 feet [4267 mm]	As Req'd.	
5	305979-000	Light, **Amber flashing**	1	**Amber**
5	306366-000	Lens, **Amber**	1	**Amber**
5	305979-001	Light, **Red flashing**	1	**Red**
5	306368-000	Lens, **Red**	1	**Red**
5	305979-002	Light, **Amber strobe**	1	**Amber**
5	306366-000	Lens, **Amber**	1	**Amber**
5	305979-003	Light, **Red strobe**	1	**Red**
5	306368-000	Lens, **Red**	1	**Red**
5	305979-004	Light, **Blue flashing**	1	**Blue**
5	306367-000	Lens, **Blue**	1	**Blue**
*	306369-000	Flashing, bulb	1	**Bulb**
*	303305-000	Tube, flash **(strobe light)**	1	**Tube**
6	11176-11	Screw, slotted	2	
7	306186-000	Fitting, Socket wire	2	
8	307069-000	Bracket	1	
9	301952-016	Screw, flat head	2	
10	15677-07	Clamp	1	
11	11176-11	Screw, slotted	1	
12	307151-000	Bracket	1	

© BT Prime-Mover, Inc.

9390-000

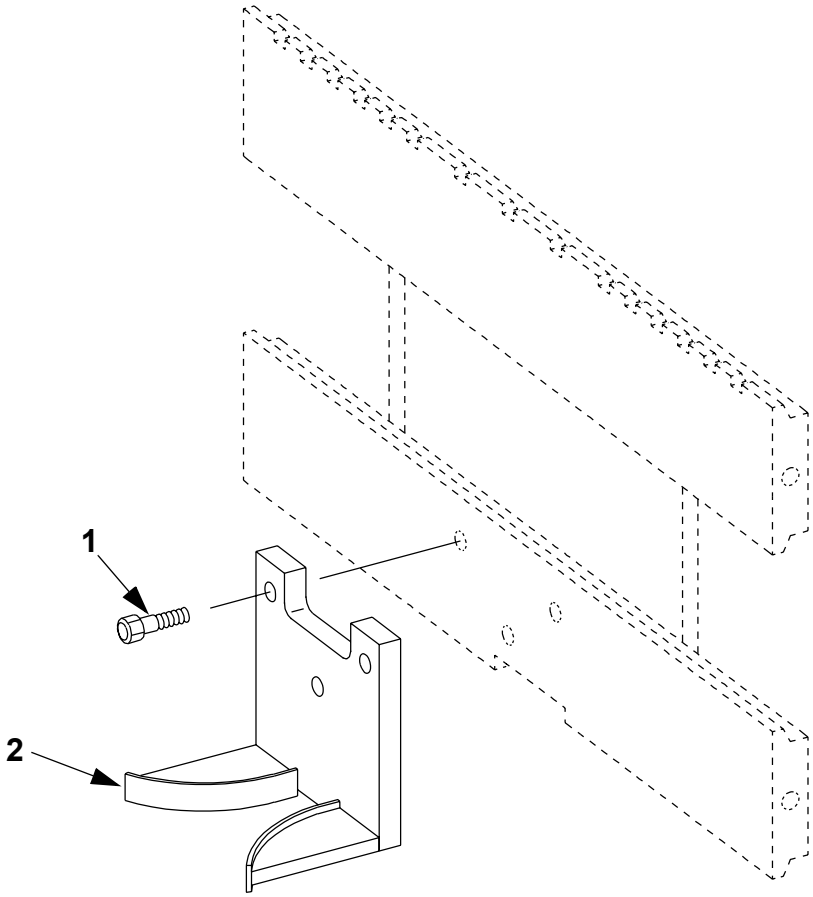

© BT Prime-Mover, Inc.

Return

9390-000 Positioning equipment

ITEM #	PART #	NAME	# FOR ASSY.	UNITS
1	301957-035	Screw, cap	3	
2	306396-000	Device, pallet centering	1	

© BT Prime-Mover, Inc.

9500-000

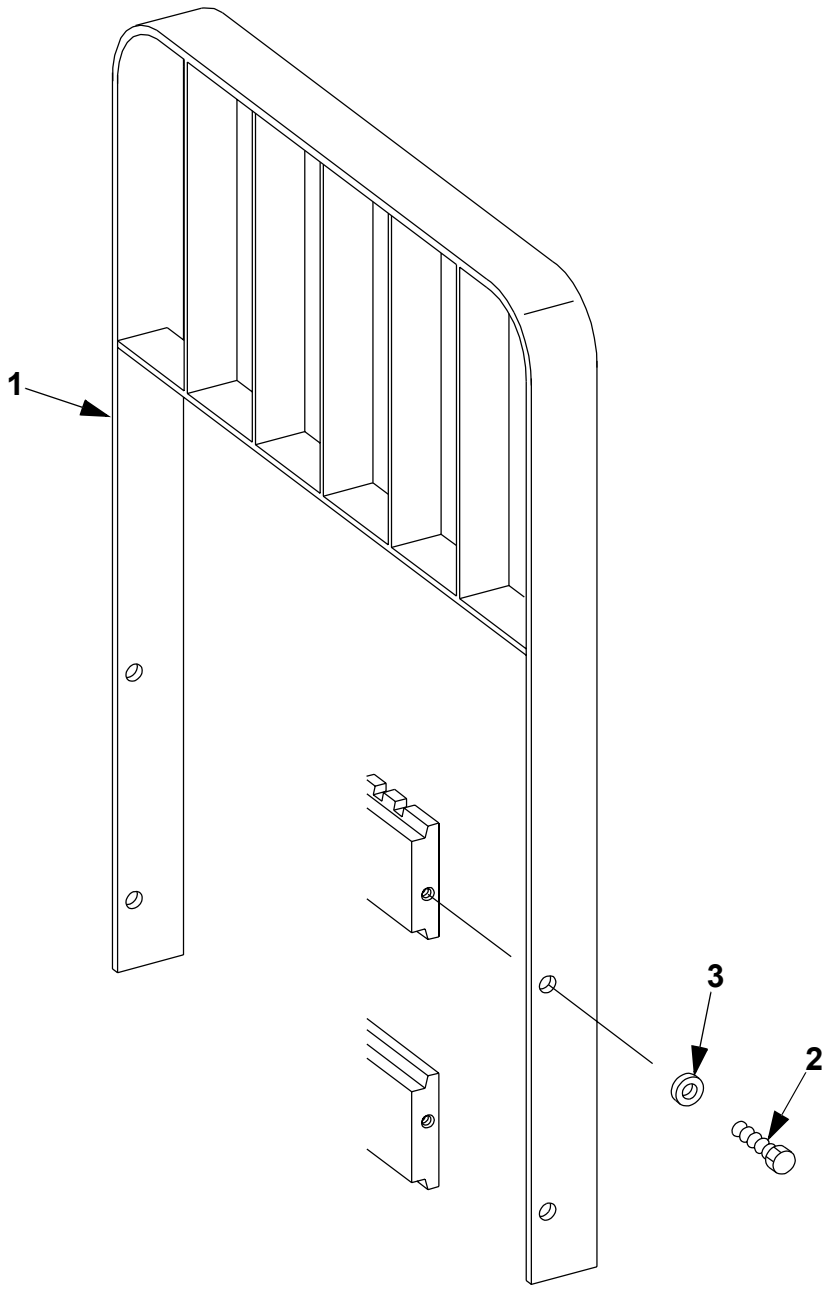

© BT Prime-Mover, Inc.

9500-000 Extra mechanical equipment

ITEM #	PART #	NAME	# FOR ASSY.	UNITS
1	306294-000	Backrest, **44 in. (1118mm)** load **(No Sideshifter)**	1	**44 inch**
1	306294-001	Backrest, **36 in. (915mm)** load **(No Sideshifter)**	1	**36 inch**
1	306294-002	Backrest, **48 in. (1219mm)** load **(No Sideshifter)**	1	**48 inch**
1	305138-000	Backrest, **44 in. (1118mm)** load **(With Sideshifter)**	1	**44 inch**
1	305138-001	Backrest, **36 in. (915mm)** load **(With Sideshifter)**	1	**36 inch**
1	305138-002	Backrest, **48 in. (1219mm)** load **(With Sideshifter)**	1	**48 inch**
2	301957-030	Screw, cap	4	
3	50000-15	Washer, flat	4	

© BT Prime-Mover, Inc.

9660-000

Control Handle Side View-Section

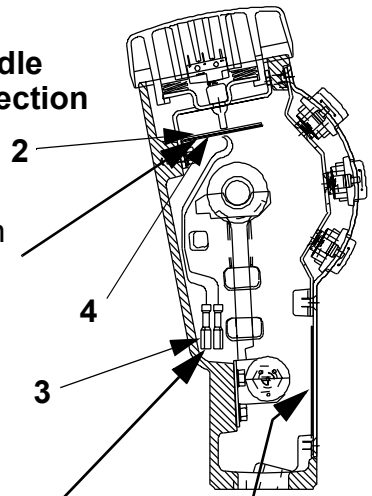

Position heater on inside of bracket.

Control Handle Top View

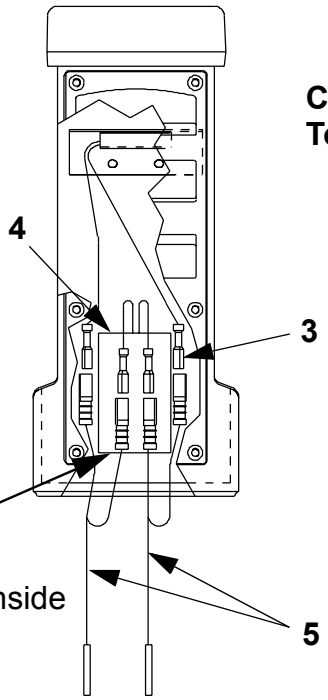

Position heaters on inside of cover as shown.

Crimp 1/4” insulated male tabs onto heater leads and connect leads to harness.

Thermostat Location

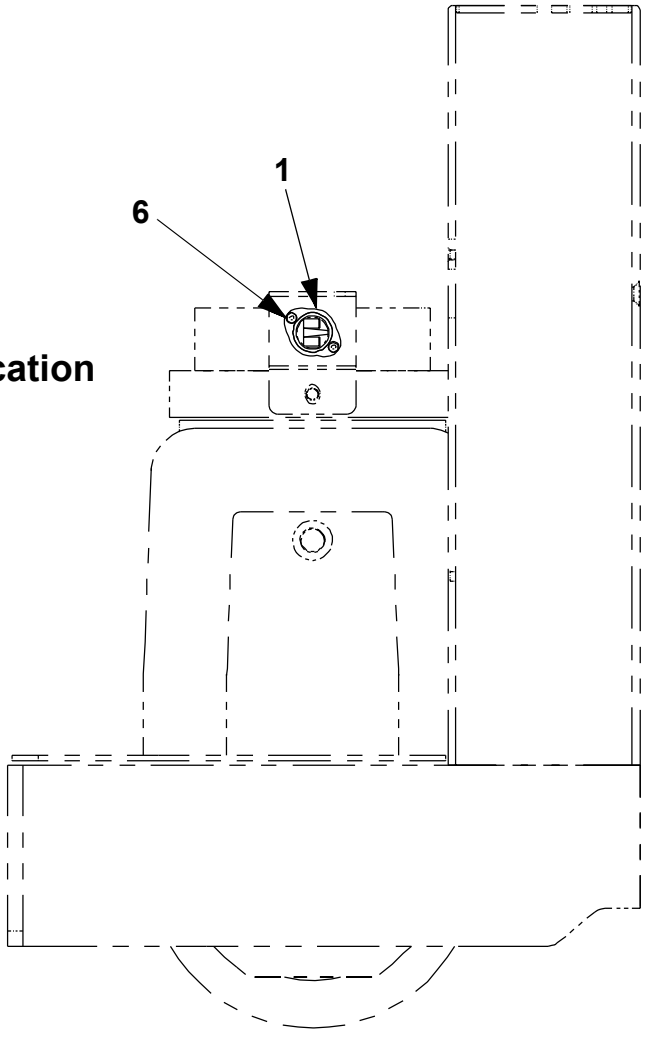

© BT Prime-Mover, Inc.

9660-000 Electrical heater

ITEM #	PART #	NAME	# FOR ASSY.	UNITS
1	49831-00	Thermostat	1	
2	302224-000	Bracket, heater	1	
3	49771-09	Fitting, male tab wire	4	
4	49506-03	Heater	2	
5	302231-000	Harness, heater	2	
6	301825-010	Screw	2	

© BT Prime-Mover, Inc.

This page intentionally left blank

© BT Prime-Mover Inc.

Return

10000
Tools

© BT Prime-Mover Inc.

Return

10010-000

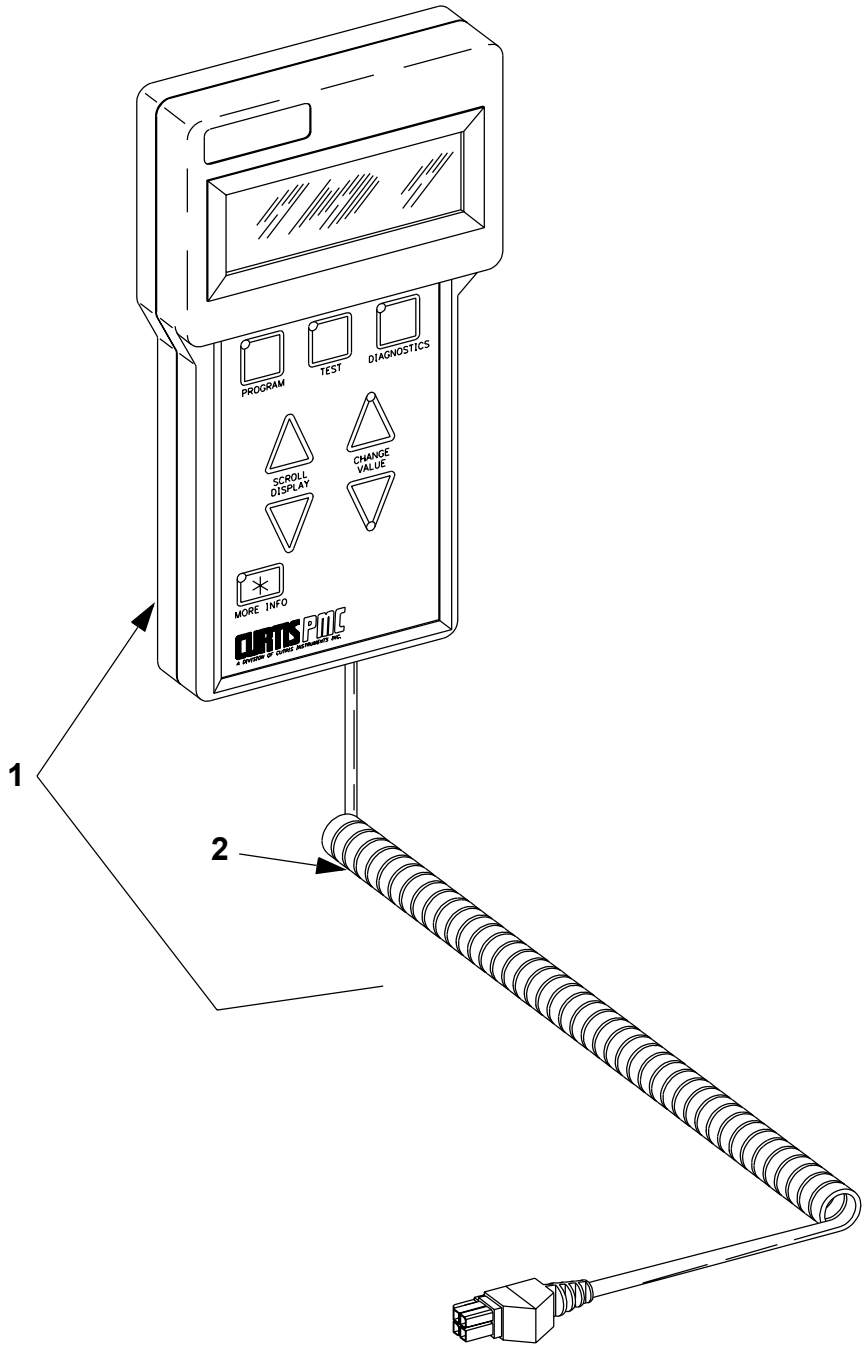

© BT Prime-Mover, Inc.

Return

10010-000 Electrical controllers (Handset)

ITEM #	PART #	NAME	# FOR ASSY.	UNITS
1	306415-000	Kit, handset	1	
2	306416-000	Cable, handset	1	

© BT Prime-Mover, Inc.

10020-000

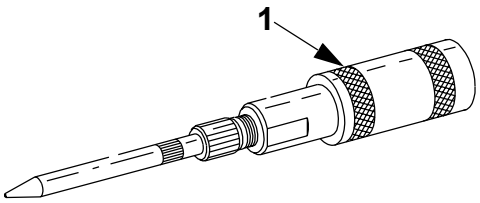

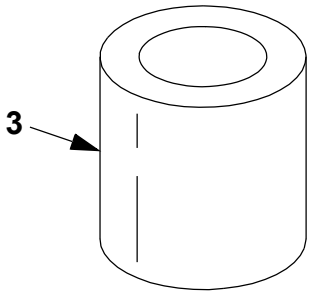

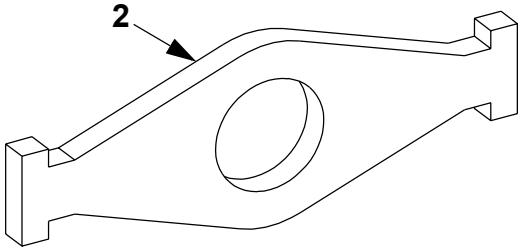

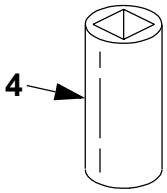

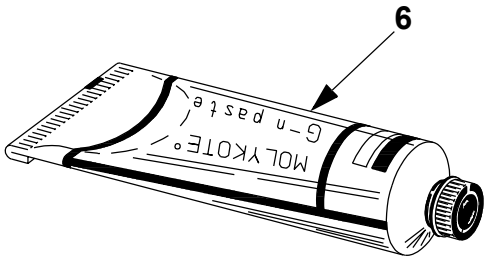

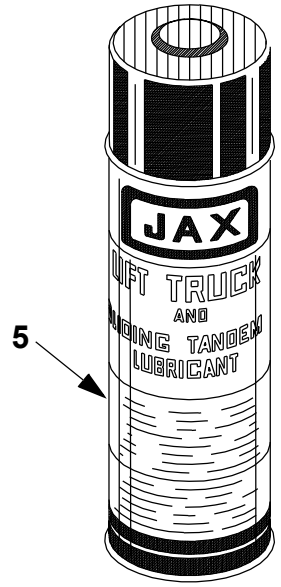

© BT Prime-Mover, Inc.

Return

10020-000 Special tools and lubrications

ITEM #	PART #	NAME	# FOR ASSY.	UNITS
1	202154	Adapter, flush and hard to reach	1	
2	300128-000	Lifter, battery pack	1	
3	300129-000	Tool, bearing installing	1	
4	300161-000	Socket, Relief Valve	1	
5	49670-00	Lubricant, lift truck	1	
6	200025	Lubricant, 2 oz. Molykote	1	
*	301582-000	Loctite tube, #RC680	1	
*	301583-000	Loctite spray can, N primer (for #RC680)	1	
*	301584-000	Loctite, 50 ML tube #515 gasket eliminator	1	

© BT Prime-Mover, Inc.

This page intentionally left blank

© BT Prime-Mover Inc.

Return

11000
Alphabetical/Numerical Index

© BT Prime-Mover Inc.

Return

© BT Prime-Mover, Inc.

Return

WRX30 ELECTRIC TRUCK

Alphabetical Index

This Alphabetical Index gives part numbers and figure numbers on which they are listed. Item numbers have also been listed for easier location of part numbers.

Description	Part#	FIG.#	Item#
Adapter	202154	10020-000	1
Adapter	306061-000	6100-000	14
Adapter	306061-000	6100-001	14
Adapter	49656-00	6128-002	5
Adapter	49656-08	6128-002	2
Anchor	306898-000	6125-200	4
Anchor, chain	304359-000	7110-000	3
Anchor, chain	304359-000	7110-100	1
Anchor, chain	306096-000	7241-003	48
Anchor, spring	301860-000	3300-000	6
Arm, inner	308236-000	7241-003	9
Arm, inner	308262-000	7241-003	9
Arm, left	306678-000	7241-003	5
Arm, right	306678-001	7241-003	26
Armature	307632-000	1760-001	6
Armature & fan assembly	306017-000	1750-000	12
Axle	304619-000	3550-000	2
Axle	304619-001	3550-000	2
Axle, caster	301297-000	3560-000	5
Backrest	305138-000	9500-000	1
Backrest	305138-001	9500-000	1
Backrest	305138-002	9500-000	1
Backrest	306294-000	9500-000	1
Backrest	306294-001	9500-000	1
Backrest	306294-002	9500-000	1
Baffle	301764-000	4110-001	3
Ball	300947-008	6100-000	24
Ball	300947-008	6100-001	24
Ball	306120-000	6160-100	2
Band, EE cover	305983-000	1750-000	14
Band, cover	200027	1750-000	1
Bar, bus	305966-000	5430-000	10
Bar, bus	305967-000	5430-000	8
Bar, bus	305968-000	5430-000	9
Bar, bus	305969-000	5430-000	9
Bar, down stop	305946-001	7110-000	9
Bar, fork	308041-000	7241-003	21
Bar, torsion	304315-001	3540-000	9
Base, plate	27796-02	3560-000	1
Base, spring	304316-001	3540-000	12
Battery discharge indicator, BDI	305282-001	5230-000	2
Battery discharge indicator/hourmeter	301445-001	5230-000	1
Bearing	11205-26	4180-000	10
Bearing	11205-27	2550-000	12
Bearing	11205-30	4180-000	12
Bearing	21089-01	7241-003	46
Bearing	21089-02	7110-000	2
Bearing	21089-02	7110-100	6
Bearing	25189-02	0390-200	3
Bearing	28142-00	6620-200	12
Bearing	29630-00	6610-200	14
Bearing	300654-000	6650-002	8
Bearing	305093-000	6610-100	13
Bearing	307630-000	1760-001	4
Bearing	307630-000	1760-001	11
Bearing	49832-00	7241-003	32
Bearing	49910-02	3550-000	5
Bearing, ball	11030-21	2550-000	10
Bearing, ball	49910-01	3560-000	12
Bearing, ball sealed	200309	1750-000	11
Bearing, ball sealed	200310	1750-000	4
Bearing, cylinder	308359-000	6660-001	7
Bearing, flanged	11695-12	4110-001	20
Bearing, handle	301949-000	3300-000	8
Bearing, roller	11205-29	3560-000	14
Bearing, roller	49994-03	7110-100	31
Bearing, roller	49994-03	7170-000	5
Bearing, spherical	308515-000	6650-002	21
Bearing, thrust	304349-000	3560-000	2
Block	301781-000	4111-000	10
Body, cylinder	308288-000	7210-001	15
Bolt	306003-000	6100-000	16
Bolt	306670-000	6100-001	16
Bolt, lower hook	308279-000	7210-001	6
Bolt, stop	308280-000	7210-001	7
Boot	305862-000	0640-000	4
Box, EE	305971-000	0342-000	1
Bracket	304633-000	0640-000	19
Bracket	304634-000	0640-000	6
Bracket	305522-000	7110-100	20
Bracket	306169-000	7241-003	43
Bracket	307069-000	9370-001	8
Bracket	307151-000	9370-001	12
Bracket	308276-000	7210-001	2
Bracket, harness	302061-000	4180-000	6
Bracket, heater	302224-000	9660-000	2
Bracket, switch	301724-000	4111-000	2
Bracket, switch	306064-000	5510-000	13
Brake assembly	23008-00	3360-000	1
Breaker	301889-000	5910-000	1
Breaker	307601-000	5911-000	1
Breaker	307601-001	5911-000	1
Breather kit	305010-000	6110-001	6
Brush box assembly	307636-000	1760-001	9
Brush set	200188	1750-000	7
Bumper	302290-000	4110-001	2
Bumper	49563-00	7241-003	35
Bumper, door	302069-000	0340-000	2
Bushing	11020-41	3540-000	6
Bushing	11020-46	5161-000	5
Bushing	11695-05	3300-000	9
Bushing	301777-000	4111-000	12
Bushing	307444-000	0641-000	5
Bushing	308290-000	7210-001	20
Bushing	49853-02	5191-000	3
Bushing	49929-04	7241-003	8
Bushing	49929-05	7241-003	33
Bushing	49929-09	7241-003	20
Bushing	49929-11	6660-001	2
Bushing	49929-13	7241-003	6
Bushing, flanged	11695-06	0640-000	2
Bushing, flanged	11695-12	4110-001	14
Cable	305974-000	5430-000	14
Cable	305974-001	5430-000	16
Cable	305974-002	5430-000	15
Cable	305974-003	5430-000	13
Cable	305974-004	5430-000	8
Cable	305975-000	5430-000	3
Cable	305975-001	5430-000	11
Cable	305976-000	5430-000	2
Cable	305976-001	5430-000	1
Cable	52-07907-00	9370-001	4
Cable, handset	306416-000	10010-000	2
Cable, Negative	49856-148	5191-000	4
Cable, Positive	49856-148	5191-000	5
Cam	109631	0641-000	2
Cam	300199-000	3360-000	2
Cap	301347-000	7241-003	31
Cap, bearing	307015-000	7241-003	45
Cap, end	306135-000	6160-100	14
Cap, hub	27809-00	3560-000	10
Cap, left cylinder	308292-000	7210-001	22
Cap, relief	201489	6100-000	20
Cap, relief	201489	6100-001	20
Cap, relief	306140-000	6160-100	21
Cap, right	308287-000	7210-001	14
Case, gear	301580-001	2550-000	1
Caster assembly	304583-000	3560-000	*
Chain, Free lift	14835-83	7110-100	10
Chain, Free lift	14835-84	7110-100	10
Chain, Free lift	14835-85	7110-100	10
Chain, lift	14835-11	7110-000	4
Chain, lift	14835-28	7110-000	4
Chain, lift	14835-38	7110-000	4
Chain, Staging lift	14835-08	7110-100	2
Chain, Staging lift	14835-10	7110-100	2
Chain, Staging lift	14835-70	7110-100	2
Clamp	15677-02	7241-003	41

Return

WRX30 ELECTRIC TRUCK

Alphabetical Index

Description	Part#	FIG.#	Item#
Clamp	15677-07	9370-001	2
Clamp	15677-07	9370-001	10
Clamp	15677-10	4110-001	17
Clamp	15677-10	5390-000	3
Clamp	15677-10	5390-001	3
Clamp	15677-10	6124-100	12
Clamp	15677-15	6124-001	7
Clamp	305009-000	0300-000	13
Clamp	305009-000	6110-001	4
Clamp	306012-000	6100-000	13
Clamp	306012-000	6100-001	13
Clamp	306050-000	6127-002	13
Clamp	306062-000	6100-000	11
Clamp	306062-000	6100-001	11
Clamp	49709-10	4180-000	5
Clamp, cable	302080-000	4111-000	4
Clamp, poly	306050-000	7241-003	13
Clevis	300938-000	6650-002	14
Clip	300202-000	3360-000	5
Coil	304794-000	6220-102	4
Coil	304797-000	6220-002	2
Coil	304797-000	6220-102	2
Coil	305122-000	6170-000	4
Coil, field package	306018-000	1750-000	9
Column, inner	303908-000	7110-100	9
Column, inner	303908-001	7110-100	9
Column, inner	303908-002	7110-100	9
Column, Inner	305081-000	7110-000	6
Column, Inner	305081-001	7110-000	6
Column, Inner	305081-002	7110-000	6
Column, Intermediate	303923-000	7110-100	19
Column, Intermediate	303923-001	7110-100	19
Column, Intermediate	303923-002	7110-100	19
Column, outer	303974-000	7110-100	28
Column, outer	303974-001	7110-100	28
Column, outer	303974-002	7110-100	28
Column, Outer	305495-000	7110-000	20
Column, Outer	305495-001	7110-000	20
Column, Outer	305495-002	7110-000	20
Compensator cylinder assembly	305755-000	6120-001	15
Connector, plug	306215-001	5390-000	10
Connector, plug	306215-001	5390-001	10
Connector, SB-175 BLUE housing	49854-08	5190-000	1
Connector, SB-175 BLUE housing	49854-08	5191-000	1
Connector, SB-175 GRAY housing	49854-01	5190-000	1
Connector, SB-175 GRAY housing	49854-01	5191-000	1
Connector, SB-175 RED housing	49854-04	5190-000	1
Connector, SB-175 RED housing	49854-04	5191-000	1
Connector, SB-175 YELLOW housing	49854-03	5190-000	1
Connector, SB-175 YELLOW housing	49854-03	5191-000	1
Connector, tip	49852-01	5191-000	2
Console	301844-000	0340-000	1
Contactor	304297-000	5192-100	1
Contactor, line	23452-01	5192-000	1
Control Valve Assembly, Two Spool	305938-000	6160-100	1
Control, thumb	301718-000	0641-000	7
Controller	305878-000	5460-000	1
Counterweight	304647-000	0370-000	1
Coupler	202324	6100-000	2
Coupler	202324	6100-001	2
Cover	301723-000	4111-000	5
Cover	306001-000	6100-000	6
Cover	306001-000	6100-001	6
Cover	306258-000	6127-002	12
Cover	306258-000	7241-003	14
Cover, gear case	301581-000	2550-000	7
Cover, valve	306861-000	7241-003	12
Cushion	305632-000	0300-000	11
Cushion	305633-000	0300-000	10
Cylinder	308294-000	7210-001	26
Cylinder	308294-001	7210-001	26
Cylinder assembly	304100-014	6610-200	**
Cylinder assembly	304100-015	6610-200	*
Cylinder assembly	304100-016	6610-200	**
Cylinder assembly	304100-017	6610-200	*
Cylinder assembly	304100-018	6610-200	**
Cylinder assembly	304100-019	6610-200	*
Cylinder assembly	304105-000	6620-200	*
Cylinder assembly	304105-001	6620-200	*
Cylinder assembly	304105-002	6620-200	*
Cylinder assembly	305088-000	6610-100	*
Cylinder assembly	305088-001	6610-100	*
Cylinder assembly	305088-002	6610-100	*
Decal, 300 AMP EE	29410-00	0342-000	7
Decal, Left BT LOGO	151848	0850-001	7
Decal, NO RIDING	304597-000	0850-001	2
Decal, NO STEP	305507-000	0850-001	10
Decal, Raise/Lower	306418-000	0850-001	9
Decal, Reach/Tilt	306419-000	0850-001	5
Decal, Reach/Tilt/Auxiliary	306420-001	0850-001	5
Decal, Reach/Tilt/Sideshifter	306420-000	0850-001	5
Decal, Right BT LOGO	151847	0850-001	6
Decal, WARNING	305955-000	0850-001	1
Decal, WARNING	307500-000	0850-001	3
Decal, WARNING	309733-000	0850-001	4
Decal, WRX	305023-000	0850-001	11
Detent, spool	306143-000	6160-100	15
Detent, spool	306467-000	6160-100	16
Device, pallet centering	306396-000	9390-000	2
Diode	49607-00	5390-000	8
Diode	49607-00	5390-001	8
Display, BDI/Hourmeter lift interrupt	306051-001	5230-000	3
Door	306239-000	0340-000	7
Door, battery	304783-000	0390-200	4
Drive motor assembly	305879-000	1760-001	1
Drum, brake	23019-00	3300-000	2
E clip	13281-02	4110-001	5
Elbow, 45½	49654-01	6120-001	14
Elbow, 90½	49653-08	6129-001	2
Elbow, 90½	49653-13	6124-001	8
Endhead	306009-000	6100-000	25
Endhead	306009-000	6100-001	25
Endhead, commutator	307639-000	1760-001	13
Endhead, drive	307629-000	1760-001	3
Fan	200307	1750-000	13
Filter	305124-000	6170-000	8
Filter	306060-000	6100-000	10
Filter	306060-000	6100-001	10
Filter assembly	305123-000	6170-000	7
Fitting, 90? grease	11160-14	4180-000	3
Fitting, 90½	49653-01	6120-001	7
Fitting, 90½	49653-01	6120-001	8
Fitting, 90½	49653-01	6120-001	11
Fitting, 90½ bulkhead	49634-02	6124-100	3
Fitting, adapter	49632-00	6125-200	5
Fitting, adapter	49655-01	6120-001	6
Fitting, adapter	49656-00	6127-002	4
Fitting, adapter	49656-00	6129-001	6
Fitting, adapter	49656-01	6120-001	2
Fitting, adapter	49656-01	6124-100	17
Fitting, adapter	49656-08	6120-001	12
Fitting, adapter	49656-08	6126-001	3
Fitting, adapter	49656-08	6126-100	3
Fitting, adapter	49656-08	6127-002	1
Fitting, adapter	49656-08	6129-001	4
Fitting, adaptor	49656-00	6126-001	1
Fitting, adaptor	49656-00	6126-100	1
Fitting, adaptor	49656-12	6124-001	5
Fitting, bulkhead	49632-00	6125-100	2
Fitting, diagnostic	49587-01	6110-001	9
Fitting, female receptacle wire	49771-00	9370-001	1
Fitting, grease	11160-09	3550-000	1
Fitting, grease	11160-11	3560-000	6
Fitting, grease	11160-11	4110-001	25
Fitting, grease	11160-11	6650-002	22
Fitting, grease	11160-11	7110-100	35
Fitting, grease	11160-11	7170-000	1
Fitting, grease	11160-11	7241-003	7
Fitting, male tab wire	49771-02	5310-000	*
Fitting, male tab wire	49771-09	9660-000	3
Fitting, Socket wire	306186-000	9370-001	7
Fitting, Tee	49615-01	6124-001	4
Fitting, tee	49616-01	6120-001	9
Flashing, bulb	306369-000	9370-001	*
Fork assembly	21372-00	7410-001	*
Fork assembly	21372-01	7410-001	*
Fork assembly	21372-02	7410-001	*
Fork assembly	21372-03	7410-001	*
Fork assembly	25008-01	7410-001	*
Fork assembly	25008-02	7410-001	*

© BT Prime-Mover, Inc.

Return

WRX30 ELECTRIC TRUCK

Alphabetical Index

Description	Part#	FIG.#	Item#
Fork assembly	25008-03	7410-001	*
Fork assembly	25008-04	7410-001	*
Frame, battery roller	305042-000	0390-200	1
Frame, forward	308232-000	7241-003	17
Frame, forward	308263-000	7241-003	17
Frame, rear	308042-000	7241-003	3
Frame, rear	308261-000	7241-003	3
Fuse, 300 AMP	25094-04	5430-000	4
Gasket	306127-000	6160-100	6
Gear	119697	5330-000	2
Gear, drive	301627-000	2550-000	16
Gear, idler	301665-000	2550-000	11
Gear, pinion	23006-00	2550-000	4
Grip, fixed	301720-000	4111-000	18
Grip, twist	301719-000	4111-000	13
Grommet EE	11813-14	0342-000	6
Grommet EE	11813-15	0342-000	5
Guard	301721-000	4111-000	8
Handle	304655-000	0640-000	10
Handle	305716-000	6110-001	8
Harness	304775-000	5390-000	6
Harness	306191-008	5590-000	1
Harness	306191-009	5590-100	1
Harness	307107-000	5590-100	3
Harness	307107-001	5590-100	3
Harness	307107-002	5590-100	3
Harness	307107-003	5590-100	2
Harness	307107-004	5590-100	2
Harness	307107-005	5590-100	2
Harness	307107-006	5590-000	2
Harness	307107-007	5590-000	2
Harness	307107-008	5590-000	2
Harness	307111-000	5590-000	3
Harness	307111-000	5590-100	4
Harness	307566-000	5390-001	6
Harness, handle stem	305881-000	5390-000	5
Harness, handle stem	307193-000	5390-001	5
Harness, head	302023-000	5390-000	1
Harness, head	302023-000	5390-001	1
Harness, heater	302231-000	9660-000	5
Harness, main	305935-000	5390-000	7
Harness, main	307589-000	5390-001	7
Harness, wire	306052-000	5230-000	4
Head, commutator end	200200	1750-000	2
Head, drive end	306019-000	1750-000	10
Head, sheave	304118-000	7170-000	7
Heater	49506-03	9660-000	4
Hook, lower	308284-000	7210-001	11
Horn	23309-01	5161-000	4
Hose	306059-000	6100-000	12
Hose	306059-000	6100-001	12
Hose	306183-000	6126-001	2
Hose	306183-001	6126-100	2
Hose	308557-000	6128-002	4
Hose	308559-000	6128-002	3
Hose	311381-029	6125-100	4
Hose	311381-029	6125-200	1
Hose	49517-19	6124-100	18
Hose	49517-29	6124-100	11
Hose	49517-33	6124-001	12
Hose	49517-33	6124-100	19
Hose	49517-34	6124-001	9
Hose	49517-35	6124-001	3
Hose	49643-30	6129-001	1
Hose	49643-31	6129-001	5
Hose	49643-39	6128-002	7
Hose assembly	306182-000	6127-002	9
Hose assembly	307107-000	6125-200	7
Hose assembly	307107-001	6125-200	7
Hose assembly	307107-002	6125-200	7
Hose assembly	307107-003	6125-200	6
Hose assembly	307107-004	6125-200	6
Hose assembly	307107-005	6125-200	6
Hose assembly	307107-006	6125-100	1
Hose assembly	307107-007	6125-100	1
Hose assembly	307107-008	6125-100	1
Hose assembly	308558-000	6127-002	10
Hose assembly	311381-035	6127-002	8
Hose assembly	311381-036	6127-002	6
Hose assembly	49516-49	6124-100	4
Hose assembly	49517-18	6120-001	10
Hose assembly	49641-54	6124-100	2
Hose assembly	49641-55	6124-100	2
Hose assembly	49641-56	6124-100	2
Hose, guard	52-05103-00	6129-001	*
Hose, guard	52-05103-00	6129-001	*
Hose, mast raise/lower	49517-17	6120-001	4
Hose, spool valve to tank	49517-17	6120-001	3
Hourmeter	302201-000	5290-000	1
Housing, switch	301717-000	4111-000	15
Jumper	20163-102	5390-000	9
Jumper	20163-102	5390-001	9
Key	11844-02	2550-000	3
Key	11844-02	3300-000	1
Keys, set of 2	302092-000	5310-000	*
Kit	308518-000	5510-000	4
Kit, check seal	310524-000	6220-002	*
Kit, check seal	310524-000	6220-102	*
Kit, compensator seal	305755-010	6120-001	K
Kit, coverband	305981-000	1760-001	K
Kit, field coil	307633-000	1760-001	7
Kit, handset	306415-000	10010-000	1
Kit, knob	311115-000	7410-001	K
Kit, lead assembly	307637-000	1760-001	10
Kit, pin	308439-000	4110-001	K
Kit, Seal	305119-000	6170-000	*
Kit, seal	305121-000	6170-000	*
Kit, seal	308058-000	6650-002	K
Kit, seal	308298-000	7210-001	K
Kit, seal	308361-000	6660-001	K
Kit, seal	309694-000	6220-102	*
Kit, seal	310526-000	6220-002	*
Kit, seal	310526-000	6220-102	*
Kit, seal	310842-000	6220-002	*
Kit, seal	310842-000	6220-102	*
Kit, seal	311416-000	6610-200	K
Kit, seal	311418-000	6610-100	K
Kit, seal	311418-000	6620-200	K
Knob, auxiliary	306341-000	0640-000	8
Knob, auxiliary	306342-000	0640-000	8
Knob, auxiliary	306342-001	0640-000	8
Knob, lift/lower	305858-000	0640-000	5
Latch	301802-000	0340-000	8
Latch	304574-000	0340-000	3
Lens, Amber	306366-000	9370-001	5
Lens, Amber	306366-000	9370-001	5
Lens, Blue	306367-000	9370-001	5
Lens, Red	306368-000	9370-001	5
Lens, Red	306368-000	9370-001	5
Lever	300201-000	3360-000	4
Lid, EE	305972-000	0342-000	2
Lifter, battery pack	300128-000	10020-000	2
Light, Amber flashing	305979-000	9370-001	5
Light, Amber strobe	305979-002	9370-001	5
Light, Blue flashing	305979-004	9370-001	5
Light, Red flashing	305979-001	9370-001	5
Light, Red strobe	305979-003	9370-001	5
Line, hydraulic	305567-000	7110-100	17
Link	14813-00	0640-000	18
Linkage, brake	301754-000	3300-000	15
Lockwasher	11072-14	5510-000	17
Lockwasher	300647-061	6100-000	27
Lockwasher	300647-061	6100-001	27
Lockwasher	300947-009	6100-000	7
Lockwasher	300947-009	6100-001	7
Lockwasher	50001-11	7110-100	22
Lockwasher	50001-11	7110-100	33
Lockwasher and screw	306142-000	6160-100	23
Loctite spray can, N primer	301583-000	10020-000	*
Loctite tube	301582-000	10020-000	*
Loctite, gasket eliminator	301584-000	10020-000	*
Lubricant	200025	10020-000	6
Lubricant, lift truck	49670-00	10020-000	5
Magnet	13928-00	6110-001	7
Manifold	306166-000	7241-003	39
Manifold	308263-000	7241-003	16
Manifold assembly	310679-000	6220-102	1
Manifold assembly (No Sideshifter)	310679-001	6220-002	*
Manual, CSX/WSX/WRX Master Service	304956-000	0850-001	*
Manual, WRX-30 Master Parts	304955-000	0850-001	*

© BT Prime-Mover, Inc.

Return

WRX30 ELECTRIC TRUCK

Alphabetical Index

Description	Part#	FIG.#	Item#
Mounting	306000-000	6100-000	4
Mounting	306000-000	6100-001	4
Nut	11261-11	5510-000	18
Nut	301960-004	4111-000	3
Nut	301960-006	3300-000	3
Nut	301960-006	5190-000	5
Nut	301960-006	5430-000	7
Nut	301960-006	6127-002	14
Nut	301960-008	0300-000	1
Nut	301960-008	0820-000	6
Nut	301960-008	4180-000	8
Nut	301960-008	6124-001	6
Nut	301960-008	7241-003	47
Nut	301960-010	5180-000	4
Nut	301960-020	3540-000	13
Nut	301960-020	7110-000	18
Nut	301960-020	7110-100	26
Nut	302773-008	7241-003	44
Nut	302773-016	6650-002	13
Nut	304358-020	7110-000	17
Nut	304358-020	7110-100	15
Nut	49624-00	6125-100	3
Nut	49624-00	6125-200	2
Nut	49624-02	6124-100	8
Nut, clip	14851-04	4110-001	16
Nut, clip	14851-04	5390-000	2
Nut, clip	14851-04	5390-001	2
Nut, flanged	164046	2550-000	15
Nut, flanged	301654-012	2550-000	5
Nut, flanged	301654-012	3300-000	19
Nut, jam	303716-020	7110-000	16
Nut, jam	303716-020	7110-100	16
Nut, jam	303716-030	7241-003	28
Nut, jam	306139-000	6160-100	20
Nut, slotted	304348-000	3560-000	8
Nut, twin	14986-03	5310-000	4
O ring	202315	6100-000	19
O ring	202315	6100-001	19
O ring	11015-39	6610-200	13
O ring	12391-10	6610-200	8
O Ring	305125-000	6170-000	9
O Ring	305126-000	6170-000	10
O ring	306123-000	6160-100	3
Orifice	25969-05	6127-002	3
Orifice	306374-002	6120-001	13
Orifice, 0.020 inch [0.508 mm]	310972-000	6220-002	5
Orifice, 0.020 inch [0.508 mm]	310972-000	6220-102	7
Pad, lower	308285-000	7210-001	12
Pad, upper	308278-000	7210-001	4
Paint, BT BLACK semi gloss	52-00220-00	0850-001	7
Paint, BT RED	52-00279-00	0850-001	7
Paint, SAFETY ORANGE	52-00247-00	0850-001	7
Paint, SAFETY YELLOW	52-00237-00	0850-001	7
Panel	306345-000	5460-000	3
Panel, kick	306858-000	0340-000	5
Pin	201450	6100-000	5
Pin	201450	6100-001	5
Pin	301762-000	4110-001	6
Pin	301778-000	4111-000	14
Pin	308039-000	7241-003	2
Pin	308039-000	7241-003	25
Pin	308240-000	7241-003	19
Pin	308240-001	7241-003	19
Pin, anchor	300758-000	7110-100	13
Pin, brake pivot	301885-000	4110-001	26
Pin, brake pivot	305564-000	4110-001	26
Pin, chain	30554-00	7110-000	7
Pin, chain	30554-00	7110-100	4
Pin, clevis	300935-000	6650-002	4
Pin, clevis	300935-001	6650-002	5
Pin, cotter	11133-05	7110-000	11
Pin, cotter	11133-05	7110-100	14
Pin, cotter	11133-05	7241-003	50
Pin, cotter	11157-03	7110-000	5
Pin, cotter	11157-03	7110-100	3
Pin, cylinder anchor	300758-001	7110-000	12
Pin, dowel	11890-09	2550-000	2
Pin, dowel	306007-000	6100-000	26
Pin, dowel	306007-000	6100-001	26
Pin, groove	302572-000	4110-001	10
Pin, roll	20174	6650-002	3
Pin, roll	11073-17	7241-003	18
Pin, roll	11073-24	0640-000	1
Pin, roll	11073-34	3560-000	9
Pin, roll	301964-032	0641-000	1
Pin, roll	301965-026	4111-000	6
Pin, threaded	301779-000	0641-000	8
Pin, yoke	11135-07	7241-003	49
Piston	29634-00	6610-200	10
Piston	304112-000	6610-100	8
Piston	304112-000	6620-200	8
Piston	308289-000	7210-001	17
Piston	308289-001	7210-001	17
Pivet, handle	301753-000	4110-001	12
Pivot	301748-000	3540-000	4
Plate	300200-000	3360-000	3
Plate	301882-000	0340-000	12
Plate assembly, brush	200189	1750-000	5
Plate, latch	302060-000	0340-000	10
Plate, lower hook	308286-000	7210-001	13
Plug	306141-000	6160-100	22
Plug	310973-000	6220-002	7
Plug	49274-10	6610-200	7
Plug assembly	306133-000	6160-100	12
Plug, drain/fill pipe	301653-020	2550-000	8
Plug, hole	14915-01	5230-000	5
Plug, large	305128-000	6170-000	2
Plug, No Sideshifter	12318-03	6128-002	*
Plug, No Sideshifter	12318-05	6128-002	*
Plug, small	305127-000	6170-000	5
Plunger assembly	29830-00	6610-200	5
Plunger assembly	304106-000	6610-100	5
Plunger assembly	304106-000	6620-200	5
Pocket	302153-000	0300-000	3
Poppet	306134-000	6160-100	13
Potentiometer bracket assembly	307644-000	5330-000	1
Pump and Motor Assembly	305008-000	6100-000	*
Pump and Motor Assembly	305008-001	6100-001	*
Pump assembly	306004-000	6100-000	17
Pump assembly	306671-000	6100-001	17
Pump Motor Assembly	306010-000	1750-000	*
Race	49993-07	7170-000	4
Race, inner	49993-07	7110-100	32
Reach cylinder assembly	309777-000	6650-002	1
Reach cylinder assembly	309777-001	6650-002	2
Receptacle, socket	306216-001	5390-000	11
Receptacle, socket	306216-001	5390-001	11
Regulator, flow	21037-04	6124-100	16
Regulator, flow	21037-05	6124-001	11
Reservoir	303872-000	6110-001	5
Restrictor, flow	308297-000	7210-001	29
Retainer	301945-006	3300-000	14
Retainer	307631-000	1760-001	5
Retainer, ball	306128-000	6160-100	7
Retainer, cylinder	300891-000	6660-001	3
Retainer, spring	301788-000	3540-000	11
Return	101216	0641-000	3
Reverser assembly (3 Wire)	305990-000	0840-000	1
Ring	23007-00	2550-000	13
Ring, cylinder cap	308291-000	7210-001	21
Ring, retainer	11827-20	6610-100	4
Ring, retainer	11827-20	6620-200	4
Ring, retainer	23075-02	6610-100	9
Ring, retainer	27892-00	6610-200	11
Ring, retainer	304983-000	7170-000	2
Rod	308293-000	7210-001	25
Rod	308293-001	7210-001	25
Rod cylinder	304111-000	6620-200	9
Rod cylinder	304111-001	6620-200	9
Rod cylinder	304111-002	6620-200	9
Rod cylinder	305090-000	6610-100	10
Rod cylinder	305090-001	6610-100	10
Rod cylinder	305090-002	6610-100	10
Rod cylinder	308057-000	6650-002	12
Rod, cylinder	300897-000	6660-001	10
Rod, cylinder	304101-007	6610-200	12
Rod, cylinder	304101-008	6610-200	12
Rod, cylinder	304101-009	6610-200	12
Rod, push	305985-000	3300-000	16
Roller, battery	25204-09	0390-200	2

© BT Prime-Mover, Inc.

Return

Description	Part#	FIG.#	Item#
Screen, 71/100 Two Stage Mast	306149-000	0820-000	5
Screen, 71/150 Three Stage Mast	306275-000	0820-000	5
Screen, 83/124 Two Stage Mast	306150-000	0820-000	5
Screen, 83/180 Three Stage Mast	306360-000	0820-000	5
Screen, 87/189 Three Stage Mast	306360-000	0820-000	5
Screen, 95/150 Two Stage Mast	306277-000	0820-000	5
Screw	24488	6127-002	11
Screw	24488	7241-003	15
Screw	29544	0820-000	1
Screw	11885-03	5510-000	16
Screw	301652-016	7241-003	40
Screw	301825-010	0840-000	2
Screw	301825-010	5330-000	3
Screw	301825-010	5510-000	12
Screw	301825-010	9660-000	6
Screw	301827-020	0340-000	13
Screw	301922-020	4110-001	15
Screw	301950-016	5510-000	15
Screw	301951-010	5610-000	2
Screw	301954-025	3300-000	17
Screw	303009-000	3300-000	10
Screw	303009-025	2550-000	6
Screw	305141-035	0300-000	6
Screw	308275-000	7210-001	1
Screw	308296-000	7210-001	28
Screw	49548-00	6610-100	2
Screw	49548-00	6610-200	1
Screw	49548-00	6620-200	2
Screw, adjustment	306126-000	6160-100	5
Screw, button head	302772-040	7110-100	8
Screw, cap	20055	0640-000	17
Screw, cap	20420	7241-003	1
Screw, cap	20616	3540-000	5
Screw, cap	28336	0300-000	7
Screw, cap	11017-04	3560-000	16
Screw, cap	11854-03	7241-003	38
Screw, cap	300947-007	6100-000	8
Screw, cap	300947-007	6100-001	8
Screw, cap	300947-012	6100-000	15
Screw, cap	300947-012	6100-001	15
Screw, cap	301652-016	6124-001	10
Screw, cap	301652-016	7110-100	18
Screw, cap	301652-016	7110-100	43
Screw, cap	301652-016	7241-003	22
Screw, cap	301652-025	0340-000	11
Screw, cap	301652-025	0640-000	12
Screw, cap	301652-025	3540-000	2
Screw, cap	301652-025	6125-200	3
Screw, cap	301652-030	0640-000	11
Screw, cap	301652-090	6110-001	3
Screw, cap	301951-010	5192-000	*
Screw, cap	301951-010	5192-100	*
Screw, cap	301951-010	5430-000	6
Screw, cap	301951-010	5430-000	7
Screw, cap	301951-010	5460-000	2
Screw, cap	301951-016	3300-000	7
Screw, cap	301951-016	5430-000	5
Screw, cap	301951-016	6124-100	13
Screw, cap	301951-016	6660-001	4
Screw, cap	301952-040	5190-000	2
Screw, Cap	301955-030	3540-000	8
Screw, cap	301957-030	7110-000	10
Screw, cap	301957-030	9500-000	2
Screw, cap	301957-035	0370-000	3
Screw, cap	301957-035	9390-000	1
Screw, cap	301957-060	7110-100	39
Screw, cap	301958-060	7110-000	13
Screw, cap	301958-060	7110-100	24
Screw, cap	301958-110	3540-000	14
Screw, cap	50003-01	7110-100	21
Screw, cap	50003-01	7110-100	34
Screw, cap	50004-03	5180-000	1
Screw, cap EE	301825-010	0342-000	3
Screw, cap EE	301951-010	0342-000	4
Screw, flat head	24600	7241-003	4
Screw, flat head	301921-012	4111-000	1
Screw, flat head	301922-014	0640-000	20
Screw, flat head	301922-020	5390-000	4
Screw, flat head	301922-020	5390-001	4
Screw, flat head	301922-100	4111-000	16
Screw, flat head	301952-016	9370-001	9
Screw, flat head	305999-000	6100-000	3
Screw, flat head	305999-000	6100-001	3
Screw, flat head lock	301922-020	7241-003	30
Screw, flat head locking	301922-020	4111-000	9
Screw, flat head socket	301922-025	4110-001	8K
Screw, flat head socket	301922-025	4110-001	22K
Screw, flat socket head	301922-016	0340-000	4
Screw, flat socket head	301922-020	0300-000	4
Screw, lock	21424	7241-003	11
Screw, locking	301652-030	0340-000	9
Screw, lower hook set	308281-000	7210-001	8
Screw, relief adjuster	201512	6100-000	22
Screw, relief adjuster	201512	6100-001	22
Screw, round	11880-09	5310-000	2
Screw, set	301740-001	3550-000	3
Screw, set	301740-001	4110-001	13
Screw, set	301740-001	7170-000	10
Screw, shoulder	301961-010	4111-000	7
Screw, slotted	11176-11	9370-001	3
Screw, slotted	11176-11	9370-001	6
Screw, slotted	11176-11	9370-001	11
Screw, socket	301954-035	4111-000	11
Screw, socket	301955-016	0340-000	6
Screw, socket head	27205	5161-000	3
Screw, socket head	11047-18	7241-003	34
Screw, socket head	301652-016	4110-001	11
Screw, socket head	301652-016	4180-000	4
Screw, socket head	301954-025	4110-001	4
Screw, socket head	301954-060	3300-000	5
Screw, socket head	301955-016	4180-000	7
Screw, socket head	306006-000	6100-000	28
Screw, socket head	306006-000	6100-001	28
Seal	11039-31	2550-000	14
Seal	307628-000	1760-001	2
Seal, felt	27810-00	3560-000	3
Seal, large felt	301946-000	4180-000	11
Seal, oil	202393	6100-000	18
Seal, oil	202393	6100-001	18
Seal, small felt	301946-001	4180-000	13
Seat, valve	306125-000	6160-100	4
Set, bearing	303707-000	7241-003	29
Shaft	29637-00	7110-100	36
Shaft	304117-000	7170-000	9
Shaft	304648-000	0640-000	7
Shaft	307612-000	7170-000	9
Shaft, cam	301780-000	0641-000	6
Shaft, roller	25203-09	0390-200	5
Shaft, sheave	304610-000	7110-100	40
Sheave	29624-00	7170-000	6
Sheave	305148-000	7110-100	41
Sheave	305148-000	7170-000	8
Sheave	305535-000	7110-100	23
Sheave, chain	29624-00	7110-100	30
Sheave, hose	301837-000	7110-100	38
Shield, top 71/100 Two Stage Mast	306877-001	0820-000	3
Shield, upper Three Stage Mast	306774-001	0820-000	2
Shim, 0.025 in. [0.635 mm]	11857-11	7241-003	37
Shim, 0.05 in. [1.27 mm]	11857-05	7110-000	1
Shim, 0.05 in. [1.27 mm]	11857-05	7110-100	5
Shim, 0.05 in. [1.27 mm]	11857-10	7241-003	37
Shim, 0.060 in. [1.52 mm]	21837-01	7241-003	36
Shim, 0.063 in. [1.58 mm]	304357-000	7170-000	3
Shim, 0.08 in. [2.03 mm]	11857-09	7110-000	1
Shim, 0.08 in. [2.03 mm]	11857-09	7110-100	5
Shim, 0.1196 in. [3.03 mm]	21837-00	7241-003	36
Shoe	300203-000	3360-000	7
Sideshifter assembly	307969-000	7210-001	*
Sideshifter assembly	307969-001	7210-001	*
Sleeve	52-05103-00	5430-000	12
Socket, Relief Valve	300161-000	10020-000	4
Solenoid	22226-01	5610-000	1
Solenoid Control Valve Assembly	305021-000	6170-000	*
Spacer	26617-03	7110-100	37
Spacer	304855-000	4110-001	18
Spacer	306131-000	6160-100	10
Spool, T	306137-000	6160-100	18
Spray, BT BLACK semi gloss	52-00224-00	0850-001	7
Spray, BT RED	52-00257-00	0850-001	7
Spray, SAFETY ORANGE	52-00276-00	0850-001	8

© BT Prime-Mover, Inc.

WRX30 ELECTRIC TRUCK

Alphabetical Index

Description	Part#	FIG.#	Item#
Spray, SAFETY YELLOW	52-00260-00	0850-001	7
Spring	29635-00	6610-100	6
Spring	29635-00	6610-200	6
Spring	29635-00	6620-200	6
Spring	300204-000	3360-000	6
Spring	301765-000	4110-001	19
Spring	301920-000	3300-000	18
Spring	305786-000	3540-000	10
Spring	306005-000	6100-000	23
Spring	306005-000	6100-001	23
Spring	306129-000	6160-100	8
Spring	306132-000	6160-100	11
Spring set, brush	200190	1750-000	6
Spring, brush	307635-000	1760-001	8
Spring, load check	306130-000	6160-100	9
Spring, return	46490	0641-000	4
Spring, return	301917-000	5161-000	2
Spring, return	301917-000	5510-000	1
Stem, handle	301766-000	4110-001	21
Strap, static	307567-000	5180-000	3
Support	304659-000	0300-000	9
Support	308277-000	7210-001	3
Switch	305861-000	0640-000	9
Switch	306097-000	5510-000	14
Switch, brake interlock	20208-00	5310-000	3
Switch, brake interlock	20323-00	5310-000	3
Switch, disconnect	305493-000	5310-000	5
Switch, horn	302129-000	5161-000	1
Switch, key	302016-000	5310-000	1
Switch, lift	302130-000	5510-000	2
Switch, lower	302130-001	5510-000	3
Switch, toggle	304267-000	5310-000	1
Tee	49616-01	6124-100	14
Tee	49652-01	6124-100	15
Terminal stud package	200150	1750-000	8
Thermostat	49831-00	9660-000	1
Thrust washer package	200159	1750-000	3
Tie, wire	25332-01	5430-000	17
Tie, wire	25332-04	6129-001	*
Tie, wire	25332-04	6129-001	*
Tilt Cylinder Assembly	308360-000	6660-001	1
Tire, Crowned Urethane	303624-000	3530-000	2
Tire, Grip Rubber Shell drive	20071-05	3530-000	2
Tire, Non-marking XLC drive	20071-03	3530-000	2
Tire, Rubber	20071-01	3530-000	2
Tire, Traction-lug drive	20071-04	3530-000	2
Tool, bearing installing	300129-000	10020-000	3
Transmission assembly	301633-007	2550-000	*
Tube	304653-000	0640-000	3
Tube	304654-000	0640-000	21
Tube	305629-000	6129-001	3
Tube	306002-000	6100-000	9
Tube	306002-000	6100-001	9
Tube cylinder	304108-000	6620-200	3
Tube cylinder	304108-001	6620-200	3
Tube cylinder	304108-002	6620-200	3
Tube cylinder	304263-000	6610-200	4
Tube cylinder	304263-001	6610-200	3
Tube cylinder	304263-002	6610-200	4
Tube cylinder	304263-003	6610-200	3
Tube cylinder	304263-014	6610-200	4
Tube cylinder	304263-015	6610-200	3
Tube cylinder	305089-000	6610-100	3
Tube cylinder	305089-001	6610-100	3
Tube cylinder	305089-002	6610-100	3
Tube cylinder	309780-000	6650-002	19
Tube cylinder	309780-001	6650-002	20
Tube, cylinder	300893-000	6660-001	14
Tube, flash (strobe light)	303305-000	9370-001	*
Valve, 3 way 2 position	305120-000	6170-000	6
Valve, BI-Directional	304795-000	6220-002	3
Valve, BI-Directional	304795-000	6220-102	3
Valve, check	305117-000	6170-000	1
Valve, check	310514-000	6220-002	6
Valve, check	310514-000	6220-102	8
Valve, flow limit	26907-00	6124-100	5
Valve, flow limit	26907-01	6124-100	1
Valve, flow limit	26907-02	6124-100	9
Valve, flow limiting	26907-01	6124-001	2
Valve, N.C.	305118-000	6170-000	3
Valve, N.C.	308328-000	6220-102	5
Valve, relief	310810-000	6220-002	8
Valve, relief	310810-000	6220-102	9
Washer	20375	3300-000	20
Washer	11936-17	3560-000	7
Washer	300889-000	7241-003	24
Washer	301776-000	4111-000	17
Washer	302096-008	4110-001	9K
Washer	302096-008	4110-001	23K
Washer	306136-000	6160-100	17
Washer	307009-000	7241-003	23
Washer	307009-001	7241-003	23
Washer	307009-002	7241-003	23
Washer	307334-000	0820-000	7
Washer	308295-000	7210-001	27
Washer, brass flat	302792-000	5430-000	7
Washer, flat	20348	5180-000	2
Washer, flat	14935-01	7110-100	42
Washer, flat	303717-030	7241-003	27
Washer, flat	50000-13	7241-003	42
Washer, flat	50000-15	0370-000	2
Washer, flat	50000-15	9500-000	3
Washer, flat	50000-17	0300-000	8
Washer, flat	50000-19	7110-000	14
Washer, flat	50000-19	7110-100	25
Washer, lower hook	308283-000	7210-001	10
Washer, seal	11897-03	6610-100	1
Washer, seal	11897-03	6610-200	2
Washer, seal	11897-03	6620-200	1
Washer, sealing	11897-05	2550-000	9
Washer, shim	29609-00	7110-100	29
Washer, spacer	14935-01	3560-000	15
Washer, spacer	301298-000	3560-000	11
Washer, spring	307638-000	1760-001	12
Washer, stop bolt	308282-000	7210-001	9
Washer, trust	11857-20	3550-000	4
Wheel	27808-00	3560-000	13
Wheel, Crowned Urethane	302258-006	3530-000	1
Wheel, drive	302247-000	3530-000	3
Wheel, Grip Rubber Shell drive	302258-004	3530-000	1
Wheel, load	42136-00	3550-000	6
Wheel, Non-marking XLC drive	302258-002	3530-000	1
Wheel, Rubber drive	302258-000	3530-000	1
Wheel, Traction-lug drive	302258-003	3530-000	1
Windshield, 71/100 Two Stage Mast	306264-003	0820-000	4
Windshield, 71/150 Three Stage Mast	306067-002	0820-000	4
Windshield, 83/124 Two Stage Mast	306264-004	0820-000	4
Windshield, 83/180 Three Stage Mast	306067-003	0820-000	4
Windshield, 87/189 Three Stage Mast	306067-003	0820-000	4
Windshield, 95/150 Two Stage Mast	306264-005	0820-000	4
Wire	52-07933-00	5390-000	12
Wire	52-07933-00	5390-001	12
Yoke assembly	301944-000	3300-000	4
Yoke, caster	302058-000	3560-000	4

Return
© BT Prime-Mover, Inc.

WRX30 ELECTRIC TRUCK

Numerical Index

This Numerical Index gives part numbers and figure numbers on which they are listed. Item numbers have also been listed for easier location of part numbers.

Part#	Description	FIG.#	Item#
20055	Screw, cap	0640-000	17
20174	Pin, roll	6650-002	3
20348	Washer, flat	5180-000	2
20375	Washer	3300-000	20
20420	Screw, cap	7241-003	1
20616	Screw, cap	3540-000	5
21424	Screw, lock	7241-003	11
24488	Screw	6127-002	11
24488	Screw	7241-003	15
24600	Screw, flat head	7241-003	4
27205	Screw, socket head	5161-000	3
28336	Screw, cap	0300-000	7
29544	Screw	0820-000	1
46490	Spring, return	0641-000	4
101216	Return	0641-000	3
109631	Cam	0641-000	2
119697	Gear	5330-000	2
151847	Decal, Right BT LOGO	0850-001	6
151848	Decal, Left BT LOGO	0850-001	7
164046	Nut, flanged	2550-000	15
200025	Lubricant	10020-000	6
200027	Band, cover	1750-000	1
200150	Terminal stud package	1750-000	8
200159	Thrust washer package	1750-000	3
200188	Brush set	1750-000	7
200189	Plate assembly, brush	1750-000	5
200190	Spring set, brush	1750-000	6
200200	Head, commutator end	1750-000	2
200307	Fan	1750-000	13
200309	Bearing, ball sealed	1750-000	11
200310	Bearing, ball sealed	1750-000	4
201450	Pin	6100-000	5
201450	Pin	6100-001	5
201489	Cap, relief	6100-000	20
201489	Cap, relief	6100-001	20
201512	Screw, relief adjuster	6100-000	22
201512	Screw, relief adjuster	6100-001	22
202154	Adapter	10020-000	1
202315	O ring	6100-000	19
202315	O ring	6100-001	19
202324	Coupler	6100-000	2
202324	Coupler	6100-001	2
202393	Seal, oil	6100-000	18
202393	Seal, oil	6100-001	18
11015-39	O ring	6610-200	13
11017-04	Screw, cap	3560-000	16
11020-41	Bushing	3540-000	6
11020-46	Bushing	5161-000	5
11030-21	Bearing, ball	2550-000	10
11039-31	Seal	2550-000	14
11047-18	Screw, socket head	7241-003	34
11072-14	Lockwasher	5510-000	17
11073-17	Pin, roll	7241-003	18
11073-24	Pin, roll	0640-000	1
11073-34	Pin, roll	3560-000	9
11133-05	Pin, cotter	7110-000	11
11133-05	Pin, cotter	7110-100	14
11133-05	Pin, cotter	7241-003	50
11135-07	Pin, yoke	7241-003	49
11157-03	Pin, cotter	7110-000	5
11157-03	Pin, cotter	7110-100	3
11160-09	Fitting, grease	3550-000	1
11160-11	Fitting, grease	3560-000	6
11160-11	Fitting, grease	4110-001	25
11160-11	Fitting, grease	6650-002	22
11160-11	Fitting, grease	7110-100	35
11160-11	Fitting, grease	7170-000	1
11160-11	Fitting, grease	7241-003	7
11160-14	Fitting, 90? grease	4180-000	3
11176-11	Screw, slotted	9370-001	3
11176-11	Screw, slotted	9370-001	6
11176-11	Screw, slotted	9370-001	11
11205-26	Bearing	4180-000	10
11205-27	Bearing	2550-000	12
11205-29	Bearing, roller	3560-000	14
11205-30	Bearing	4180-000	12
11261-11	Nut	5510-000	18
11695-05	Bushing	3300-000	9
11695-06	Bushing, flanged	0640-000	2
11695-12	Bushing, flanged	4110-001	14
11695-12	Bearing, flanged	4110-001	20
11813-14	Grommet EE	0342-000	6
11813-15	Grommet EE	0342-000	5
11827-20	Ring, retainer	6610-100	4
11827-20	Ring, retainer	6620-200	4
11844-02	Key	2550-000	3
11844-02	Key	3300-000	1
11854-03	Screw, cap	7241-003	38
11857-05	Shim, 0.05 in. [1.27 mm]	7110-000	1
11857-05	Shim, 0.05 in. [1.27 mm]	7110-100	5
11857-09	Shim, 0.08 in. [2.03 mm]	7110-000	1
11857-09	Shim, 0.08 in. [2.03 mm]	7110-100	5
11857-10	Shim, 0.05 in. [1.27 mm]	7241-003	37
11857-11	Shim, 0.025 in. [0.635 mm]	7241-003	37
11857-20	Washer, trust	3550-000	4
11880-09	Screw, round	5310-000	2
11885-03	Screw	5510-000	16
11890-09	Pin, dowel	2550-000	2
11897-03	Washer, seal	6610-100	1
11897-03	Washer, seal	6610-200	2
11897-03	Washer, seal	6620-200	1
11897-05	Washer, sealing	2550-000	9
11936-17	Washer	3560-000	7
12318-03	Plug, No Sideshifter	6128-002	*
12318-05	Plug, No Sideshifter	6128-002	*
12391-10	O ring	6610-200	8
13281-02	E clip	4110-001	5
13928-00	Magnet	6110-001	7
14813-00	Link	0640-000	18
14835-08	Chain, Staging lift	7110-100	2
14835-10	Chain, Staging lift	7110-100	2
14835-11	Chain, lift	7110-000	4
14835-28	Chain, lift	7110-000	4
14835-38	Chain, lift	7110-000	4
14835-70	Chain, Staging lift	7110-100	2
14835-83	Chain, Free lift	7110-100	10
14835-84	Chain, Free lift	7110-100	10
14835-85	Chain, Free lift	7110-100	10
14851-04	Nut, clip	4110-001	16
14851-04	Nut, clip	5390-000	2
14851-04	Nut, clip	5390-001	2
14915-01	Plug, hole	5230-000	5
14935-01	Washer, spacer	3560-000	15
14935-01	Washer, flat	7110-100	42
14986-03	Nut, twin	5310-000	4
15677-02	Clamp	7241-003	41
15677-07	Clamp	9370-001	2
15677-07	Clamp	9370-001	10
15677-10	Clamp	4110-001	17
15677-10	Clamp	5390-000	3
15677-10	Clamp	5390-001	3
15677-10	Clamp	6124-100	12
15677-15	Clamp	6124-001	7
20071-01	Tire, Rubber	3530-000	2
20071-03	Tire, Non-marking XLC drive	3530-000	2
20071-04	Tire, Traction-lug drive	3530-000	2
20071-05	Tire, Grip Rubber Shell drive	3530-000	2
20163-102	Jumper	5390-000	9
20163-102	Jumper	5390-001	9
20208-00	Switch, brake interlock	5310-000	3
20323-00	Switch, brake interlock	5310-000	3
21037-04	Regulator, flow	6124-100	16
21037-05	Regulator, flow	6124-001	11
21089-01	Bearing	7241-003	46
21089-02	Bearing	7110-000	2
21089-02	Bearing	7110-100	6
21372-00	Fork assembly	7410-001	*
21372-01	Fork assembly	7410-001	*

© BT Prime-Mover, Inc.

Return

WRX30 ELECTRIC TRUCK

NUMERICAL INDEX

Part#	Description	FIG.#	Item#
21372-02	Fork assembly	7410-001	*
21372-03	Fork assembly	7410-001	*
21837-00	Shim, 0.1196 in. [3.03 mm]	7241-003	36
21837-01	Shim, 0.060 in. [1.52 mm]	7241-003	36
22226-01	Solenoid	5610-000	1
23006-00	Gear, pinion	2550-000	4
23007-00	Ring	2550-000	13
23008-00	Brake assembly	3360-000	1
23019-00	Drum, brake	3300-000	2
23075-02	Ring, retainer	6610-100	9
23309-01	Horn	5161-000	4
23452-01	Contactor, line	5192-000	1
25008-01	Fork assembly	7410-001	*
25008-02	Fork assembly	7410-001	*
25008-03	Fork assembly	7410-001	*
25008-04	Fork assembly	7410-001	*
25094-04	Fuse, 300 AMP	5430-000	4
25189-02	Bearing	0390-200	3
25203-09	Shaft, roller	0390-200	5
25204-09	Roller, battery	0390-200	2
25332-01	Tie, wire	5430-000	17
25332-04	Tie, wire	6129-001	*
25332-04	Tie, wire	6129-001	*
25969-05	Orifice	6127-002	3
26617-03	Spacer	7110-100	37
26907-00	Valve, flow limit	6124-100	5
26907-01	Valve, flow limiting	6124-001	2
26907-01	Valve, flow limit	6124-100	1
26907-02	Valve, flow limit	6124-100	9
27796-02	Base, plate	3560-000	1
27808-00	Wheel	3560-000	13
27809-00	Cap, hub	3560-000	10
27810-00	Seal, felt	3560-000	3
27892-00	Ring, retainer	6610-200	11
28142-00	Bearing	6620-200	12
29410-00	Decal, 300 AMP EE	0342-000	7
29609-00	Washer, shim	7110-100	29
29624-00	Sheave, chain	7110-100	30
29624-00	Sheave	7170-000	6
29630-00	Bearing	6610-200	14
29634-00	Piston	6610-200	10
29635-00	Spring	6610-100	6
29635-00	Spring	6610-200	6
29635-00	Spring	6620-200	6
29637-00	Shaft	7110-100	36
29830-00	Plunger assembly	6610-200	5
300128-000	Lifter, battery pack	10020-000	2
300129-000	Tool, bearing installing	10020-000	3
300161-000	Socket, Relief Valve	10020-000	4
300199-000	Cam	3360-000	2
300200-000	Plate	3360-000	3
300201-000	Lever	3360-000	4
300202-000	Clip	3360-000	5
300203-000	Shoe	3360-000	7
300204-000	Spring	3360-000	6
300647-061	Lockwasher	6100-000	27
300647-061	Lockwasher	6100-001	27
300654-000	Bearing	6650-002	8
300758-000	Pin, anchor	7110-100	13
300758-001	Pin, cylinder anchor	7110-000	12
300889-000	Washer	7241-003	24
300891-000	Retainer, cylinder	6660-001	3
300893-000	Tube, cylinder	6660-001	14
300897-000	Rod, cylinder	6660-001	10
300935-000	Pin, clevis	6650-002	4
300935-001	Pin, clevis	6650-002	5
300938-000	Clevis	6650-002	14
300947-007	Screw, cap	6100-000	8
300947-007	Screw, cap	6100-001	8
300947-008	Ball	6100-000	24
300947-008	Ball	6100-001	24
300947-009	Lockwasher	6100-000	7
300947-009	Lockwasher	6100-001	7
300947-012	Screw, cap	6100-000	15
300947-012	Screw, cap	6100-001	15
301297-000	Axle, caster	3560-000	5
301298-000	Washer, spacer	3560-000	11
301347-000	Cap	7241-003	31
301445-001	Battery discharge indicator/hourmeter	5230-000	1
301580-001	Case, gear	2550-000	1
301581-000	Cover, gear case	2550-000	7
301582-000	Loctite tube	10020-000	*
301583-000	Loctite spray can, N primer	10020-000	*
301584-000	Loctite, gasket eliminator	10020-000	*
301627-000	Gear, drive	2550-000	16
301633-007	Transmission assembly	2550-000	*
301652-016	Screw, socket head	4110-001	11
301652-016	Screw, socket head	4180-000	4
301652-016	Screw, cap	6124-001	10
301652-016	Screw, cap	7110-100	18
301652-016	Screw, cap	7110-100	43
301652-016	Screw, cap	7241-003	22
301652-016	Screw	7241-003	40
301652-025	Screw, cap	0340-000	11
301652-025	Screw, cap	0640-000	12
301652-025	Screw, cap	3540-000	2
301652-025	Screw, cap	6125-200	3
301652-030	Screw, locking	0340-000	9
301652-030	Screw, cap	0640-000	11
301652-090	Screw, cap	6110-001	3
301653-020	Plug, drain/fill pipe	2550-000	8
301654-012	Nut, flanged	2550-000	5
301654-012	Nut, flanged	3300-000	19
301665-000	Gear, idler	2550-000	11
301717-000	Housing, switch	4111-000	15
301718-000	Control, thumb	0641-000	7
301719-000	Grip, twist	4111-000	13
301720-000	Grip, fixed	4111-000	18
301721-000	Guard	4111-000	8
301723-000	Cover	4111-000	5
301724-000	Bracket, switch	4111-000	2
301740-001	Screw, set	3550-000	3
301740-001	Screw, set	4110-001	13
301740-001	Screw, set	7170-000	10
301748-000	Pivot	3540-000	4
301753-000	Pivet, handle	4110-001	12
301754-000	Linkage, brake	3300-000	15
301762-000	Pin	4110-001	6
301764-000	Baffle	4110-001	3
301765-000	Spring	4110-001	19
301766-000	Stem, handle	4110-001	21
301776-000	Washer	4111-000	17
301777-000	Bushing	4111-000	12
301778-000	Pin	4111-000	14
301779-000	Pin, threaded	0641-000	8
301780-000	Shaft, cam	0641-000	6
301781-000	Block	4111-000	10
301788-000	Retainer, spring	3540-000	11
301802-000	Latch	0340-000	8
301825-010	Screw, cap EE	0342-000	3
301825-010	Screw	0840-000	2
301825-010	Screw	5330-000	3
301825-010	Screw	5510-000	12
301825-010	Screw	9660-000	6
301827-020	Screw	0340-000	13
301837-000	Sheave, hose	7110-100	38
301844-000	Console	0340-000	1
301860-000	Anchor, spring	3300-000	6
301882-000	Plate	0340-000	12
301885-000	Pin, brake pivot	4110-001	26
301889-000	Breaker	5910-000	1
301917-000	Spring, return	5161-000	2
301917-000	Spring, return	5510-000	1
301920-000	Spring	3300-000	18
301921-012	Screw, flat head	4111-000	1
301922-014	Screw, flat head	0640-000	20
301922-016	Screw, flat socket head	0340-000	4
301922-020	Screw, flat socket head	0300-000	4
301922-020	Screw	4110-001	15
301922-020	Screw, flat head locking	4111-000	9
301922-020	Screw, flat head	5390-000	4
301922-020	Screw, flat head	5390-001	4
301922-020	Screw, flat head lock	7241-003	30
301922-025	Screw, flat head socket	4110-001	22K
301922-025	Screw, flat head socket	4110-001	8K
301922-100	Screw, flat head	4111-000	16
301944-000	Yoke assembly	3300-000	4
301945-006	Retainer	3300-000	14
301946-000	Seal, large felt	4180-000	11
301946-001	Seal, small felt	4180-000	13

© BT Prime-Mover, Inc.

Return

WRX30 ELECTRIC TRUCK

NUMERICAL INDEX

Part#	Description	FIG.#	Item#
301949-000	Bearing, handle	3300-000	8
301950-016	Screw	5510-000	15
301951-010	Screw, cap EE	0342-000	4
301951-010	Screw, cap	5192-000	*
301951-010	Screw, cap	5192-100	*
301951-010	Screw, cap	5430-000	6
301951-010	Screw, cap	5430-000	7
301951-010	Screw, cap	5460-000	2
301951-010	Screw	5610-000	2
301951-016	Screw, cap	3300-000	7
301951-016	Screw, cap	5430-000	5
301951-016	Screw, cap	6124-100	13
301951-016	Screw, cap	6660-001	4
301952-016	Screw, flat head	9370-001	9
301952-040	Screw, cap	5190-000	2
301954-025	Screw	3300-000	17
301954-025	Screw, socket head	4110-001	4
301954-035	Screw, socket	4111-000	11
301954-060	Screw, socket head	3300-000	5
301955-016	Screw, socket	0340-000	6
301955-016	Screw, socket head	4180-000	7
301955-030	Screw, Cap	3540-000	8
301957-030	Screw, cap	7110-000	10
301957-030	Screw, cap	9500-000	2
301957-035	Screw, cap	0370-000	3
301957-035	Screw, cap	9390-000	1
301957-060	Screw, cap	7110-100	39
301958-060	Screw, cap	7110-000	13
301958-060	Screw, cap	7110-100	24
301958-110	Screw, cap	3540-000	14
301960-004	Nut	4111-000	3
301960-006	Nut	3300-000	3
301960-006	Nut	5190-000	5
301960-006	Nut	5430-000	7
301960-006	Nut	6127-002	14
301960-008	Nut	0300-000	1
301960-008	Nut	0820-000	6
301960-008	Nut	4180-000	8
301960-008	Nut	6124-001	6
301960-008	Nut	7241-003	47
301960-010	Nut	5180-000	4
301960-020	Nut	3540-000	13
301960-020	Nut	7110-000	18
301960-020	Nut	7110-100	26
301961-010	Screw, shoulder	4111-000	7
301964-032	Pin, roll	0641-000	1
301965-026	Pin, roll	4111-000	6
302016-000	Switch, key	5310-000	1
302023-000	Harness, head	5390-000	1
302023-000	Harness, head	5390-001	1
302058-000	Yoke, caster	3560-000	4
302060-000	Plate, latch	0340-000	10
302061-000	Bracket, harness	4180-000	6
302069-000	Bumper, door	0340-000	2
302080-000	Clamp, cable	4111-000	4
302092-000	Keys, set of 2	5310-000	*
302096-008	Washer	4110-001	23K
302096-008	Washer	4110-001	9K
302129-000	Switch, horn	5161-000	1
302130-000	Switch, lift	5510-000	2
302130-001	Switch, lower	5510-000	3
302153-000	Pocket	0300-000	3
302201-000	Hourmeter	5290-000	1
302224-000	Bracket, heater	9660-000	2
302231-000	Harness, heater	9660-000	5
302247-000	Wheel, drive	3530-000	3
302258-000	Wheel, Rubber drive	3530-000	1
302258-002	Wheel, Non-marking XLC drive	3530-000	1
302258-003	Wheel, Traction-lug drive	3530-000	1
302258-004	Wheel, Grip Rubber Shell drive	3530-000	1
302258-006	Wheel, Crowned Urethane	3530-000	1
302290-000	Bumper	4110-001	2
302572-000	Pin, groove	4110-001	10
302772-040	Screw, button head	7110-100	8
302773-008	Nut	7241-003	44
302773-016	Nut	6650-002	13
302792-000	Washer, brass flat	5430-000	7
303009-000	Screw	3300-000	10
303009-025	Screw	2550-000	6
303305-000	Tube, flash (strobe light)	9370-001	*
303624-000	Tire, Crowned Urethane	3530-000	2
303707-000	Set, bearing	7241-003	29
303716-020	Nut, jam	7110-000	16
303716-020	Nut, jam	7110-100	16
303716-030	Nut, jam	7241-003	28
303717-030	Washer, flat	7241-003	27
303872-000	Reservoir	6110-001	5
303908-000	Column, inner	7110-100	9
303908-001	Column, inner	7110-100	9
303908-002	Column, inner	7110-100	9
303923-000	Column, Intermediate	7110-100	19
303923-001	Column, Intermediate	7110-100	19
303923-002	Column, Intermediate	7110-100	19
303974-000	Column, outer	7110-100	28
303974-001	Column, outer	7110-100	28
303974-002	Column, outer	7110-100	28
304100-014	Cylinder assembly	6610-200	**
304100-015	Cylinder assembly	6610-200	*
304100-016	Cylinder assembly	6610-200	**
304100-017	Cylinder assembly	6610-200	*
304100-018	Cylinder assembly	6610-200	**
304100-019	Cylinder assembly	6610-200	*
304101-007	Rod, cylinder	6610-200	12
304101-008	Rod, cylinder	6610-200	12
304101-009	Rod, cylinder	6610-200	12
304105-000	Cylinder assembly	6620-200	*
304105-001	Cylinder assembly	6620-200	*
304105-002	Cylinder assembly	6620-200	*
304106-000	Plunger assembly	6610-100	5
304106-000	Plunger assembly	6620-200	5
304108-000	Tube cylinder	6620-200	3
304108-001	Tube cylinder	6620-200	3
304108-002	Tube cylinder	6620-200	3
304111-000	Rod cylinder	6620-200	9
304111-001	Rod cylinder	6620-200	9
304111-002	Rod cylinder	6620-200	9
304112-000	Piston	6610-100	8
304112-000	Piston	6620-200	8
304117-000	Shaft	7170-000	9
304118-000	Head, sheave	7170-000	7
304263-000	Tube cylinder	6610-200	4
304263-001	Tube cylinder	6610-200	3
304263-002	Tube cylinder	6610-200	4
304263-003	Tube cylinder	6610-200	3
304263-014	Tube cylinder	6610-200	4
304263-015	Tube cylinder	6610-200	3
304267-000	Switch, toggle	5310-000	1
304297-000	Contactor	5192-100	1
304315-001	Bar, torsion	3540-000	9
304316-001	Base, spring	3540-000	12
304348-000	Nut, slotted	3560-000	8
304349-000	Bearing, thrust	3560-000	2
304357-000	Shim, 0.063 in. [1.58 mm]	7170-000	3
304358-020	Nut	7110-000	17
304358-020	Nut	7110-100	15
304359-000	Anchor, chain	7110-000	3
304359-000	Anchor, chain	7110-100	1
304574-000	Latch	0340-000	3
304583-000	Caster assembly	3560-000	*
304597-000	Decal, NO RIDING	0850-001	2
304610-000	Shaft, sheave	7110-100	40
304619-000	Axle	3550-000	2
304619-001	Axle	3550-000	2
304633-000	Bracket	0640-000	19
304634-000	Bracket	0640-000	6
304647-000	Counterweight	0370-000	1
304648-000	Shaft	0640-000	7
304653-000	Tube	0640-000	3
304654-000	Tube	0640-000	21
304655-000	Handle	0640-000	10
304659-000	Support	0300-000	9
304775-000	Harness	5390-000	6
304783-000	Door, battery	0390-200	4
304794-000	Coil	6220-102	4
304795-000	Valve, BI-Directional	6220-002	3
304795-000	Valve, BI-Directional	6220-102	3
304797-000	Coil	6220-002	2
304797-000	Coil	6220-102	2
304855-000	Spacer	4110-001	18
304955-000	Manual, WRX-30 Master Parts	0850-001	*

© BT Prime-Mover, Inc.

Return

WRX30 ELECTRIC TRUCK

NUMERICAL INDEX

Part#	Description	FIG.#	Item#
304956-000	Manual, CSX/WSX/WRX Master Service	0850-001	*
304983-000	Ring, retainer	7170-000	2
305008-000	Pump and Motor Assembly	6100-000	*
305008-001	Pump and Motor Assembly	6100-001	*
305009-000	Clamp	0300-000	13
305009-000	Clamp	6110-001	4
305010-000	Breather kit	6110-001	6
305021-000	Solenoid Control Valve Assembly	6170-000	*
305023-000	Decal, WRX	0850-001	11
305042-000	Frame, battery roller	0390-200	1
305081-000	Column, Inner	7110-000	6
305081-001	Column, Inner	7110-000	6
305081-002	Column, Inner	7110-000	6
305088-000	Cylinder assembly	6610-100	*
305088-001	Cylinder assembly	6610-100	*
305088-002	Cylinder assembly	6610-100	*
305089-000	Tube cylinder	6610-100	3
305089-001	Tube cylinder	6610-100	3
305089-002	Tube cylinder	6610-100	3
305090-000	Rod cylinder	6610-100	10
305090-001	Rod cylinder	6610-100	10
305090-002	Rod cylinder	6610-100	10
305093-000	Bearing	6610-100	13
305117-000	Valve, check	6170-000	1
305118-000	Valve, N.C.	6170-000	3
305119-000	Kit, Seal	6170-000	*
305120-000	Valve, 3 way 2 position	6170-000	6
305121-000	Kit, seal	6170-000	*
305122-000	Coil	6170-000	4
305123-000	Filter assembly	6170-000	7
305124-000	Filter	6170-000	8
305125-000	O Ring	6170-000	9
305126-000	O Ring	6170-000	10
305127-000	Plug, small	6170-000	5
305128-000	Plug, large	6170-000	2
305138-000	Backrest	9500-000	1
305138-001	Backrest	9500-000	1
305138-002	Backrest	9500-000	1
305141-035	Screw	0300-000	6
305148-000	Sheave	7110-100	41
305148-000	Sheave	7170-000	8
305282-001	Battery discharge indicator, BDI	5230-000	2
305493-000	Switch, disconnect	5310-000	5
305495-000	Column, Outer	7110-000	20
305495-001	Column, Outer	7110-000	20
305495-002	Column, Outer	7110-000	20
305507-000	Decal, NO STEP	0850-001	10
305522-000	Bracket	7110-100	20
305535-000	Sheave	7110-100	23
30554-00	Pin, chain	7110-000	7
30554-00	Pin, chain	7110-100	4
305564-000	Pin, brake pivot	4110-001	26
305567-000	Line, hydraulic	7110-100	17
305629-000	Tube	6129-001	3
305632-000	Cushion	0300-000	11
305633-000	Cushion	0300-000	10
305716-000	Handle	6110-001	8
305755-000	Compensator cylinder assembly	6120-001	15
305755-010	Kit, compensator seal	6120-001	K
305786-000	Spring	3540-000	10
305858-000	Knob, lift/lower	0640-000	5
305861-000	Switch	0640-000	9
305862-000	Boot	0640-000	4
305878-000	Controller	5460-000	1
305879-000	Drive motor assembly	1760-001	1
305881-000	Harness, handle stem	5390-000	5
305935-000	Harness, main	5390-000	7
305938-000	Control Valve Assembly, Two Spool	6160-100	1
305946-001	Bar, down stop	7110-000	9
305955-000	Decal, WARNING	0850-001	1
305966-000	Bar, bus	5430-000	10
305967-000	Bar, bus	5430-000	8
305968-000	Bar, bus	5430-000	9
305969-000	Bar, bus	5430-000	9
305971-000	Box, EE	0342-000	1
305972-000	Lid, EE	0342-000	2
305974-000	Cable	5430-000	14
305974-001	Cable	5430-000	16
305974-002	Cable	5430-000	15
305974-003	Cable	5430-000	13
305974-004	Cable	5430-000	8
305975-000	Cable	5430-000	3
305975-001	Cable	5430-000	11
305976-000	Cable	5430-000	2
305976-001	Cable	5430-000	1
305979-000	Light, Amber flashing	9370-001	5
305979-001	Light, Red flashing	9370-001	5
305979-002	Light, Amber strobe	9370-001	5
305979-003	Light, Red strobe	9370-001	5
305979-004	Light, Blue flashing	9370-001	5
305981-000	Kit, coverband	1760-001	K
305983-000	Band, EE cover	1750-000	14
305985-000	Rod, push	3300-000	16
305990-000	Reverser assembly (3 Wire)	0840-000	1
305999-000	Screw, flat head	6100-000	3
305999-000	Screw, flat head	6100-001	3
306000-000	Mounting	6100-000	4
306000-000	Mounting	6100-001	4
306001-000	Cover	6100-000	6
306001-000	Cover	6100-001	6
306002-000	Tube	6100-000	9
306002-000	Tube	6100-001	9
306003-000	Bolt	6100-000	16
306004-000	Pump assembly	6100-000	17
306005-000	Spring	6100-000	23
306005-000	Spring	6100-001	23
306006-000	Screw, socket head	6100-000	28
306006-000	Screw, socket head	6100-001	28
306007-000	Pin, dowel	6100-000	26
306007-000	Pin, dowel	6100-001	26
306009-000	Endhead	6100-000	25
306009-000	Endhead	6100-001	25
306010-000	Pump Motor Assembly	1750-000	*
306012-000	Clamp	6100-000	13
306012-000	Clamp	6100-001	13
306017-000	Armature & fan assembly	1750-000	12
306018-000	Coil, field package	1750-000	9
306019-000	Head, drive end	1750-000	10
306050-000	Clamp	6127-002	13
306050-000	Clamp, poly	7241-003	13
306051-001	Display, BDI/Hourmeter lift interrupt	5230-000	3
306052-000	Harness, wire	5230-000	4
306059-000	Hose	6100-000	12
306059-000	Hose	6100-001	12
306060-000	Filter	6100-000	10
306060-000	Filter	6100-001	10
306061-000	Adapter	6100-000	14
306061-000	Adapter	6100-001	14
306062-000	Clamp	6100-000	11
306062-000	Clamp	6100-001	11
306064-000	Bracket, switch	5510-000	13
306067-002	Windshield, 71/150 Three Stage Mast	0820-000	4
306067-003	Windshield, 83/180 Three Stage Mast	0820-000	4
306067-003	Windshield, 87/189 Three Stage Mast	0820-000	4
306096-000	Anchor, chain	7241-003	48
306097-000	Switch	5510-000	14
306120-000	Ball	6160-100	2
306123-000	O ring	6160-100	3
306125-000	Seat, valve	6160-100	4
306126-000	Screw, adjustment	6160-100	5
306127-000	Gasket	6160-100	6
306128-000	Retainer, ball	6160-100	7
306129-000	Spring	6160-100	8
306130-000	Spring, load check	6160-100	9
306131-000	Spacer	6160-100	10
306132-000	Spring	6160-100	11
306133-000	Plug assembly	6160-100	12
306134-000	Poppet	6160-100	13
306135-000	Cap, end	6160-100	14
306136-000	Washer	6160-100	17
306137-000	Spool, T	6160-100	18
306139-000	Nut, jam	6160-100	20
306140-000	Cap, relief	6160-100	21
306141-000	Plug	6160-100	22
306142-000	Lockwasher and screw	6160-100	23
306143-000	Detent, spool	6160-100	15
306149-000	Screen, 71/100 Two Stage Mast	0820-000	5
306150-000	Screen, 83/124 Two Stage Mast	0820-000	5
306166-000	Manifold	7241-003	39
306169-000	Bracket	7241-003	43

© BT Prime-Mover, Inc.

Return

WRX30 ELECTRIC TRUCK

NUMERICAL INDEX

Part#	Description	FIG.#	Item#
306182-000	Hose assembly	6127-002	9
306183-000	Hose	6126-001	2
306183-001	Hose	6126-100	2
306186-000	Fitting, Socket wire	9370-001	7
306191-008	Harness	5590-000	1
306191-009	Harness	5590-100	1
306215-001	Connector, plug	5390-000	10
306215-001	Connector, plug	5390-001	10
306216-001	Receptacle, socket	5390-000	11
306216-001	Receptacle, socket	5390-001	11
306239-000	Door	0340-000	7
306258-000	Cover	6127-002	12
306258-000	Cover	7241-003	14
306264-003	Windshield, 71/100 Two Stage Mast	0820-000	4
306264-004	Windshield, 83/124 Two Stage Mast	0820-000	4
306264-005	Windshield, 95/150 Two Stage Mast	0820-000	4
306275-000	Screen, 71/150 Three Stage Mast	0820-000	5
306277-000	Screen, 95/150 Two Stage Mast	0820-000	5
306294-000	Backrest	9500-000	1
306294-001	Backrest	9500-000	1
306294-002	Backrest	9500-000	1
306341-000	Knob, auxiliary	0640-000	8
306342-000	Knob, auxiliary	0640-000	8
306342-001	Knob, auxiliary	0640-000	8
306345-000	Panel	5460-000	3
306360-000	Screen, 83/180 Three Stage Mast	0820-000	5
306360-000	Screen, 87/189 Three Stage Mast	0820-000	5
306366-000	Lens, Amber	9370-001	5
306366-000	Lens, Amber	9370-001	5
306367-000	Lens, Blue	9370-001	5
306368-000	Lens, Red	9370-001	5
306368-000	Lens, Red	9370-001	5
306369-000	Flashing, bulb	9370-001	*
306374-002	Orifice	6120-001	13
306396-000	Device, pallet centering	9390-000	2
306415-000	Kit, handset	10010-000	1
306416-000	Cable, handset	10010-000	2
306418-000	Decal, Raise/Lower	0850-001	9
306419-000	Decal, Reach/Tilt	0850-001	5
306420-000	Decal, Reach/Tilt/Sideshifter	0850-001	5
306420-001	Decal, Reach/Tilt/Auxiliary	0850-001	5
306467-000	Detent, spool	6160-100	16
306670-000	Bolt	6100-001	16
306671-000	Pump assembly	6100-001	17
306678-000	Arm, left	7241-003	5
306678-001	Arm, right	7241-003	26
306774-001	Shield, upper Three Stage Mast	0820-000	2
306858-000	Panel, kick	0340-000	5
306861-000	Cover, valve	7241-003	12
306877-001	Shield, top 71/100 Two Stage Mast	0820-000	3
306898-000	Anchor	6125-200	4
307009-000	Washer	7241-003	23
307009-001	Washer	7241-003	23
307009-002	Washer	7241-003	23
307015-000	Cap, bearing	7241-003	45
307069-000	Bracket	9370-001	8
307107-000	Harness	5590-100	3
307107-000	Hose assembly	6125-200	7
307107-001	Harness	5590-100	3
307107-001	Hose assembly	6125-200	7
307107-002	Harness	5590-100	3
307107-002	Hose assembly	6125-200	7
307107-003	Harness	5590-100	2
307107-003	Hose assembly	6125-200	6
307107-004	Harness	5590-100	2
307107-004	Hose assembly	6125-200	6
307107-005	Harness	5590-100	2
307107-005	Hose assembly	6125-200	6
307107-006	Harness	5590-000	2
307107-006	Hose assembly	6125-100	1
307107-007	Harness	5590-000	2
307107-007	Hose assembly	6125-100	1
307107-008	Harness	5590-000	2
307107-008	Hose assembly	6125-100	1
307111-000	Harness	5590-000	3
307111-000	Harness	5590-100	4
307151-000	Bracket	9370-001	12
307193-000	Harness, handle stem	5390-001	5
307334-000	Washer	0820-000	7
307444-000	Bushing	0641-000	5
307500-000	Decal, WARNING	0850-001	3
307566-000	Harness	5390-001	6
307567-000	Strap, static	5180-000	3
307589-000	Harness, main	5390-001	7
307601-000	Breaker	5911-000	1
307601-001	Breaker	5911-000	1
307612-000	Shaft	7170-000	9
307628-000	Seal	1760-001	2
307629-000	Endhead, drive	1760-001	3
307630-000	Bearing	1760-001	4
307630-000	Bearing	1760-001	11
307631-000	Retainer	1760-001	5
307632-000	Armature	1760-001	6
307633-000	Kit, field coil	1760-001	7
307635-000	Spring, brush	1760-001	8
307636-000	Brush box assembly	1760-001	9
307637-000	Kit, lead assembly	1760-001	10
307638-000	Washer, spring	1760-001	12
307639-000	Endhead, commutator	1760-001	13
307644-000	Potentiometer bracket assembly	5330-000	1
307969-000	Sideshifter assembly	7210-001	*
307969-001	Sideshifter assembly	7210-001	*
308039-000	Pin	7241-003	2
308039-000	Pin	7241-003	25
308041-000	Bar, fork	7241-003	21
308042-000	Frame, rear	7241-003	3
308057-000	Rod cylinder	6650-002	12
308058-000	Kit, seal	6650-002	K
308232-000	Frame, forward	7241-003	17
308236-000	Arm, inner	7241-003	9
308240-000	Pin	7241-003	19
308240-001	Pin	7241-003	19
308261-000	Frame, rear	7241-003	3
308262-000	Arm, inner	7241-003	9
308263-000	Manifold	7241-003	16
308263-000	Frame, forward	7241-003	17
308275-000	Screw	7210-001	1
308276-000	Bracket	7210-001	2
308277-000	Support	7210-001	3
308278-000	Pad, upper	7210-001	4
308279-000	Bolt, lower hook	7210-001	6
308280-000	Bolt, stop	7210-001	7
308281-000	Screw, lower hook set	7210-001	8
308282-000	Washer, stop bolt	7210-001	9
308283-000	Washer, lower hook	7210-001	10
308284-000	Hook, lower	7210-001	11
308285-000	Pad, lower	7210-001	12
308286-000	Plate, lower hook	7210-001	13
308287-000	Cap, right	7210-001	14
308288-000	Body, cylinder	7210-001	15
308289-000	Piston	7210-001	17
308289-001	Piston	7210-001	17
308290-000	Bushing	7210-001	20
308291-000	Ring, cylinder cap	7210-001	21
308292-000	Cap, left cylinder	7210-001	22
308293-000	Rod	7210-001	25
308293-001	Rod	7210-001	25
308294-000	Cylinder	7210-001	26
308294-001	Cylinder	7210-001	26
308295-000	Washer	7210-001	27
308296-000	Screw	7210-001	28
308297-000	Restrictor, flow	7210-001	29
308298-000	Kit, seal	7210-001	K
308328-000	Valve, N.C.	6220-102	5
308359-000	Bearing, cylinder	6660-001	7
308360-000	Tilt Cylinder Assembly	6660-001	1
308361-000	Kit, seal	6660-001	K
308439-000	Kit, pin	4110-001	K
308515-000	Bearing, spherical	6650-002	21
308518-000	Kit	5510-000	4
308557-000	Hose	6128-002	4
308558-000	Hose assembly	6127-002	10
308559-000	Hose	6128-002	3
309694-000	Kit, seal	6220-102	*
309733-000	Decal, WARNING	0850-001	4
309777-000	Reach cylinder assembly	6650-002	1
309777-001	Reach cylinder assembly	6650-002	2
309780-000	Tube cylinder	6650-002	19
309780-001	Tube cylinder	6650-002	20
310514-000	Valve, check	6220-002	6

© BT Prime-Mover, Inc.

Return

WRX30 ELECTRIC TRUCK

NUMERICAL INDEX

Part#	Description	FIG.#	Item#
310514-000	Valve, check	6220-102	8
310524-000	Kit, check seal	6220-002	*
310524-000	Kit, check seal	6220-102	*
310526-000	Kit, seal	6220-002	*
310526-000	Kit, seal	6220-102	*
310679-000	Manifold assembly	6220-102	1
310679-001	Manifold assembly (No Sideshifter)	6220-002	*
310810-000	Valve, relief	6220-002	8
310810-000	Valve, relief	6220-102	9
310842-000	Kit, seal	6220-002	*
310842-000	Kit, seal	6220-102	*
310972-000	Orifice, 0.020 inch [0.508 mm]	6220-002	5
310972-000	Orifice, 0.020 inch [0.508 mm]	6220-102	7
310973-000	Plug	6220-002	7
311115-000	Kit, knob	7410-001	K
311381-029	Hose	6125-100	4
311381-029	Hose	6125-200	1
311381-035	Hose assembly	6127-002	8
311381-036	Hose assembly	6127-002	6
311416-000	Kit, seal	6610-200	K
311418-000	Kit, seal	6610-100	K
311418-000	Kit, seal	6620-200	K
42136-00	Wheel, load	3550-000	6
49274-10	Plug	6610-200	7
49506-03	Heater	9660-000	4
49516-49	Hose assembly	6124-100	4
49517-17	Hose, spool valve to tank	6120-001	3
49517-17	Hose, mast raise/lower	6120-001	4
49517-18	Hose assembly	6120-001	10
49517-19	Hose	6124-100	18
49517-29	Hose	6124-100	11
49517-33	Hose	6124-001	12
49517-33	Hose	6124-100	19
49517-34	Hose	6124-001	9
49517-35	Hose	6124-001	3
49548-00	Screw	6610-100	2
49548-00	Screw	6610-200	1
49548-00	Screw	6620-200	2
49563-00	Bumper	7241-003	35
49587-01	Fitting, diagnostic	6110-001	9
49607-00	Diode	5390-000	8
49607-00	Diode	5390-001	8
49615-01	Fitting, Tee	6124-001	4
49616-01	Fitting, tee	6120-001	9
49616-01	Tee	6124-100	14
49624-00	Nut	6125-100	3
49624-00	Nut	6125-200	2
49624-02	Nut	6124-100	8
49632-00	Fitting, bulkhead	6125-100	2
49632-00	Fitting, adapter	6125-200	5
49634-02	Fitting, 90½ bulkhead	6124-100	3
49641-54	Hose assembly	6124-100	2
49641-55	Hose assembly	6124-100	2
49641-56	Hose assembly	6124-100	2
49643-30	Hose	6129-001	1
49643-31	Hose	6129-001	5
49643-39	Hose	6128-002	7
49652-01	Tee	6124-100	15
49653-01	Fitting, 90½	6120-001	7
49653-01	Fitting, 90½	6120-001	8
49653-01	Fitting, 90½	6120-001	11
49653-08	Elbow, 90½	6129-001	2
49653-13	Elbow, 90½	6124-001	8
49654-01	Elbow, 45½	6120-001	14
49655-01	Fitting, adapter	6120-001	6
49656-00	Fitting, adaptor	6126-001	1
49656-00	Fitting, adaptor	6126-100	1
49656-00	Fitting, adapter	6127-002	4
49656-00	Adapter	6128-002	5
49656-00	Fitting, adapter	6129-001	6
49656-01	Fitting, adapter	6120-001	2
49656-01	Fitting, adapter	6124-100	17
49656-08	Fitting, adapter	6120-001	12
49656-08	Fitting, adapter	6126-001	3
49656-08	Fitting, adapter	6126-100	3
49656-08	Fitting, adapter	6127-002	1
49656-08	Adapter	6128-002	2
49656-08	Fitting, adapter	6129-001	4
49656-12	Fitting, adaptor	6124-001	5
49670-00	Lubricant, lift truck	10020-000	5
49709-10	Clamp	4180-000	5
49771-00	Fitting, female receptacle wire	9370-001	1
49771-02	Fitting, male tab wire	5310-000	*
49771-09	Fitting, male tab wire	9660-000	3
49831-00	Thermostat	9660-000	1
49832-00	Bearing	7241-003	32
49852-01	Connector, tip	5191-000	2
49853-02	Bushing	5191-000	3
49854-01	Connector, SB-175 GRAY housing	5190-000	1
49854-01	Connector, SB-175 GRAY housing	5191-000	1
49854-03	Connector, SB-175 YELLOW housing	5190-000	1
49854-03	Connector, SB-175 YELLOW housing	5191-000	1
49854-04	Connector, SB-175 RED housing	5190-000	1
49854-04	Connector, SB-175 RED housing	5191-000	1
49854-08	Connector, SB-175 BLUE housing	5190-000	1
49854-08	Connector, SB-175 BLUE housing	5191-000	1
49856-148	Cable, Negative	5191-000	4
49856-148	Cable, Positive	5191-000	5
49910-01	Bearing, ball	3560-000	12
49910-02	Bearing	3550-000	5
49929-04	Bushing	7241-003	8
49929-05	Bushing	7241-003	33
49929-09	Bushing	7241-003	20
49929-11	Bushing	6660-001	2
49929-13	Bushing	7241-003	6
49993-07	Race, inner	7110-100	32
49993-07	Race	7170-000	4
49994-03	Bearing, roller	7110-100	31
49994-03	Bearing, roller	7170-000	5
50000-13	Washer, flat	7241-003	42
50000-15	Washer, flat	0370-000	2
50000-15	Washer, flat	9500-000	3
50000-17	Washer, flat	0300-000	8
50000-19	Washer, flat	7110-000	14
50000-19	Washer, flat	7110-100	25
50001-11	Lockwasher	7110-100	22
50001-11	Lockwasher	7110-100	33
50003-01	Screw, cap	7110-100	21
50003-01	Screw, cap	7110-100	34
50004-03	Screw, cap	5180-000	1
52-00220-00	Paint, BT BLACK semi gloss	0850-001	7
52-00224-00	Spray, BT BLACK semi gloss	0850-001	7
52-00237-00	Paint, SAFETY YELLOW	0850-001	7
52-00247-00	Paint, SAFETY ORANGE	0850-001	7
52-00257-00	Spray, BT RED	0850-001	7
52-00260-00	Spray, SAFETY YELLOW	0850-001	7
52-00276-00	Spray, SAFETY ORANGE	0850-001	8
52-00279-00	Paint, BT RED	0850-001	7
52-05103-00	Sleeve	5430-000	12
52-05103-00	Hose, guard	6129-001	*
52-05103-00	Hose, guard	6129-001	*
52-07907-00	Cable	9370-001	4
52-07933-00	Wire	5390-000	12
52-07933-00	Wire	5390-001	12

© BT Prime-Mover, Inc.

Return

Return



BT Prime-Mover, Inc., 3305 N. Highway 38, Muscatine, Iowa 52761-8800 U.S.A
Tel (563) 262-7700 • Fax (563) 262-7600

Return